[AGENDA_POSTING_DATE]

**Participants wishing to speak on a topic should message the meeting moderator. All participants are asked to mute their individual computers at times when they are not speaking to minimize background noise. Join: https://us02web.zoom.us/j/87479649917*

NOTICE OF A REGULAR MEETING
BONDURANT PLANNING AND ZONING COMMISSION
AUGUST 13, 2026

NOTICE IS HEREBY GIVEN that a Regular Meeting of the City Council will be held at 6:00 PM on August 13, 2026, in the Bondurant City Center, 200 Second Street, Northeast, Bondurant, Polk County, Iowa. Said meeting is open, and the public is encouraged to attend.

AGENDA

1. Call to Order
2. Roll Call
3. Perfecting and Approval of the Agenda
4. Approval of Minutes
   a. July 9, 2026 Minutes
5. Guests requesting to address the Planning and Zoning Commission
6. Action Items
   a. Public Hearing — Considering request to rezone Parcel 7923.01.100.001 from the Agricultural (A-1) District to the Limited Industrial (M-1) District.
   b. Resolution PZ-260813-26 — Considering request to rezone Parcel 7923.01.100.001 from the Agricultural (A-1) District to the Limited Industrial (M-1) District.
   c. Public Hearing — Considering request to rezone Parcel 7923.02.200.002 from the Agricultural (A-1) District to the Medium Industrial (M-2) District.
   d. Resolution PZ-260813-27 — Considering request to rezone Parcel 7923.02.200.002 from the Agricultural (A-1) District to the Medium Industrial (M-2) District.
   e. Resolution PZ-260813-28 — Considering recommended approval of the site plan for 2340 Hubbell Avenue SW.
7. Discussion Items -
8. Reports / Comments and appropriate action thereon:
   a. Commission Members
   b. City Administrator
   c. City Council Liaison
   d. City Staff
9. Adjournment

City of Bondurant
Planning and Zoning
Commission 200 2nd St NE,
PO Box 37
Bondurant, IA 50035

Meeting
Minutes

DATE: July 9, 2026 Karen Keeran, Chair

1. **Call to Order** **6:00 pm**
   Place Bondurant City Hall (200 2nd St NE, PO Box 37)

2. **Roll Call**

   Members Present:, Karen Keeran (Chairperson), Brian Clayton, Louise Jennings, Chris Johnsen, Ethan Pitt, Jesse Torres
   Members Absent: Jason Vore (Vice-Chairperson)

   City Official & Staff Present: Maggie Murray

3. **Perfecting and Approval of the Agenda**

   Motion by Commission Member Clayton, seconded by Commission Member Torres to approve of the July 9, 2026, meeting agenda. Vote on Motion 6-0-0. Motion carried.

4. **Approval of Minutes**
   Motion by Commission Member Pitt, seconded by Commission Member Johnsen to approve the June 11, 2026 meeting minutes. Vote on Motion 6-0-0. Motion carried.

5. **Guests requesting to address the Planning and Zoning Commission**

6. **Action Items**

   a. Public Hearing – Considering recommended approval of the McCleary Annexation, a 100% voluntary annexation request located within two miles of the city limits of both the City of Mitchellville and the City of Altoona.

   Public Hearing opened at 6:02 p.m.

   Murray provided the Commission with an overview of the annexation request. Clayton asked if any comment from Altoona, Murray stated no comments had

been received.

Public Hearing closed at 6:06 p.m.

b. Resolution PZ-260709-23 — Considering recommended approval of the McCleary Annexation, a 100% voluntary annexation request located within two miles of the city limits of both the City of Mitchellville and the City of Altoona..

Motion by Commission Member Torres, seconded by Commission Member Jennings to approve Resolution PZ - 260709-23.

Roll Call – Ayes: Commission Member Clayton, Commission Member Jennings, Commission Member Johnsen, Commission Member Keeran Commission Member Pitt, Commission Member Torres, Nays: none Abstentions: none. Absent: Commission Member Vore. Vote on Motion 6-0-0. Motion carried.

c. Public Hearing – Considering request to amend the Future Land Use Map from Medium-Density and High-Density Residential to Business Park/Limited Industrial on Parcel 7922.05.100.003..

Public Hearing opened at 6:08 p.m.

Murray provided the Commission with an overview of the Future Land Use map amendment request. Murray stated there are active industrial development taking place in this area as well as a certified site and a north-south corridor being constructed to provide access to the interstate.

Public Hearing closed at 6:10 p.m.

d. Resolution PZ-260709-24 — Considering request to amend the Future Land Use Map from Medium-Density and High-Density Residential to Business Park/Limited Industrial on Parcel 7922.05.100.003

Motion by Commission Member Torres, seconded by Commission Member Clayton to approve Resolution PZ - 260709-24.

Roll Call – Ayes: Commission Member Clayton, Commission Member Jennings, Commission Member Johnsen, Commission Member Keeran Commission Member Pitt, Commission Member Torres, Nays: none Abstentions: none. Absent: Commission Member Vore. Vote on Motion 6-0-0. Motion carried.

e. Public Hearing – Consideration of request to rezone Parcel 7922.05.100.003 from the Agricultural (A-1) District to the Limited Industrial (M-1) District.

Public Hearing opened at 6:11 p.m.

Murray provided the Commission with an overview of the rezoning request.

Public Hearing closed at 6:15 p.m.

f. Resolution PZ-260709-23 — Consideration of request to rezone Parcel 7922.05.100.003 from the Agricultural (A-1) District to the Limited Industrial (M-1) District

Motion by Commission Member Torres, seconded by Commission Member Johnsen to approve Resolution PZ - 260709-25.

Roll Call – Ayes: Commission Member Clayton, Commission Member Jennings, Commission Member Johnsen, Commission Member Keeran Commission Member Pitt, Commission Member Torres, Nays: none Abstentions: none. Absent: Commission Member Vore. Vote on Motion 6-0-0. Motion carried.

7. Discussion Items –

8. Reports / Comments and appropriate action thereon

a. Commission Members

Clayton – Asked staff about Silo Commons update. Murray stated Council did not speak much about the Sil Commons at their strategic meeting and additional conversations will take place in the future. Murray stated the contractor went a little off-script regarding capacity and future growth. Clayton asked if e-bikes can use the tunnel under Highway 65, Oliver stated yes they can. Commission and staff had additional discussion regarding e-mobility.

Jennings –Asked staff to look into a damaged utility conduit box located by the Library.

Johnsen –none.

Pitt – none.

Torres –Asked about 2nd Street NE construction process. Murray provided the Commission with an update.

Vore – absent.

Commission Chair – Asked for an update on the turn lanes on Dee Street entering Hubbell Avenue. Asked for an update on the flashing light for northbound traffic on Hubbell Avenue approaching the new 2nd Street NE intersection.

b. Community Development Director – The Station ribbon cutting will be Saturday at 11 a.m.. Provided a reminder of the upcoming Bondu Blues & Brews and sidewalk chalk event. Provided the Commission with an update

regarding the School Zone study by Bolton & Menk. The study is looking at traffic patterns on Grant Street between Hubbell and 2nd Street.

c. City Planner – absent.

d. City Administrator – none.

e. City County Liaison – none.

7. Adjournment

Motion by Commissioner Clayton, seconded by Commissioner Johnsen to adjourn the meeting. Vote on Motion 6-0-0. Motion carried. Meeting adjourned at 6:55.

BUSINESS OF THE PLANNING AND ZONING COMMISSION
BONDURANT, IOWA
AGENDA STATEMENT

Item No. 6.a.
For Meeting of 8/13/2026
Public Hearing

TITLE: Public Hearing — Considering request to rezone Parcel 7923.01.100.001 from the Agricultural (A-1) District to the Limited Industrial (M-1) District.

CONTACT PERSON:

BRIEF HISTORY & ANALYSIS: The City of Bondurant has submitted a rezoning request for Parcel 7923.01.100.001, located to the east of Franklin Street SW and south of 15th Street SW. The rezoning request proposes to change the zoning from Agricultural (A-1) District to the Limited Industrial (M-1) District. This property is currently undeveloped and use for row crop agriculture. The request area is shown outlined below.

When considering rezoning requests, the Planning & Zoning Commission and City Council should take into account the following: the Comprehensive Plan/Future Land use Map, Zoning, Parkland Dedication, Streets, Pedestrian Connections, Utilities, the FEMA Floodplain, the City's Stream Buffer Ordinance, and Comments from City Officials and Private Utilities.

Comprehensive Plan/Future Land Use Map – The property in question is currently shown as Business Park/Light Industrial on the Future Land Use Map. The properties to the north, south and east are also shown as Business Park/Light Industrial. This future land use designation most closely translates to the City's M-1 Limited Industrial or BP Business Park Districts. The request area is outlined in red below on the Future Land Use Map.

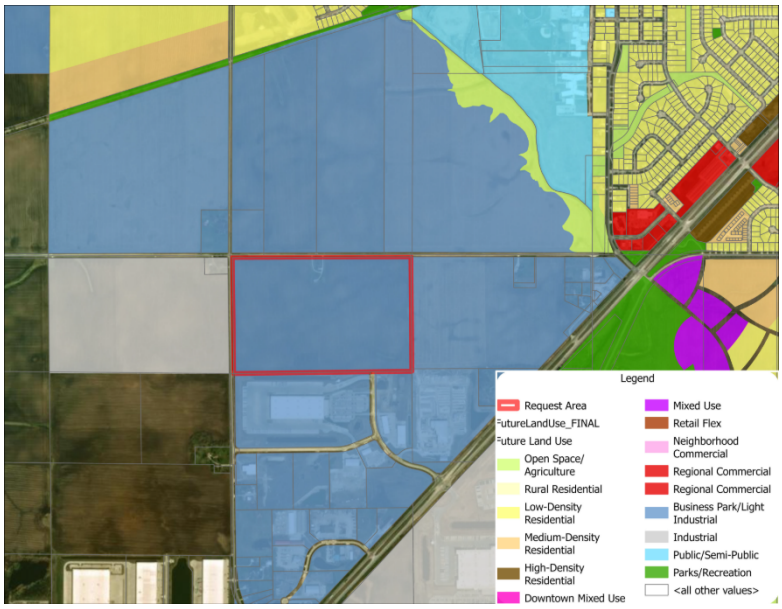

Zoning – Parcel 7923.01.100.001 is currently zoned as A-1 Agricultural and used for row crop agriculture. This use would be allowable as a legal non-conforming use if the property is successfully rezoned to the M-1 Limited Industrial District. The property to the south is currently zoned as M-1 Limited Industrial and has industrial developments on site. The property to the east is also zoned as M-1 Limited Industrial and is currently going through the City site certification process. The properties to the north and west are a mix of Agricultural, Limited Industrial, and R-2 Medium-Density Residential. The subject property is shown below in red.

Parkland Dedication – Parkland dedication is not required for industrial developments.

Streets – Franklin Street SW is located on the property's western property line. 15th Street SW is accessible from the north. Shiloh Rose Parkway SW is stubbed in the southeastern portion of the property. .

Pedestrian Connections –Pedestrian connections throughout this parcel will be addressed during the platting process.

Utilities – All utilities will be addressed during the platting process.

FEMA Floodplain – this development is not located in the FEMA Floodplain area.

Stream Buffer Ordinance - this development is not subject to the City's Stream Buffer Ordinance.

Comments from City Officials and Utilities -

- City Engineering – No comments received at this time.
- Public Works – No comments received at this time.
- Emergency Services – No comments received at this time.

FUNDING SOURCE:

STAFF RECOMMENDATION:

APPROVED FOR SUBMITTAL:

ATTACHMENTS: None

BUSINESS OF THE PLANNING AND ZONING COMMISSION
BONDURANT, IOWA
AGENDA STATEMENT

Item No. 6.b.
For Meeting of 8/13/2026
Resolution

TITLE: Resolution PZ-260813-26 — Considering request to rezone Parcel 7923.01.100.001 from the Agricultural (A-1) District to the Limited Industrial (M-1) District.

CONTACT PERSON:

BRIEF HISTORY & ANALYSIS: See Item 6.a.

FUNDING SOURCE:

STAFF RECOMMENDATION: The following options exist for the Planning & Zoning Commission:

1. Recommended approval of Resolution No. PZ-260813-26, regarding recommended approval of the rezoning request.
2. Recommended approval of Resolution No. PZ-260813-26, regarding recommended approval of the rezoning request, subject to Code clarification items being addressed.
3. Recommended denial of Resolution No. PZ-260813-26, regarding recommended approval of the rezoning request
4. Table pending additional information.

APPROVED FOR SUBMITTAL:

ATTACHMENTS:
1. RES. NO. PZ-260813-27

PLANNING AND ZONING COMMISSION
RESOLUTION NO. PZ-260813-26

RESOLUTION REGARDING RECOMMENDED APPROVAL OF THE REQUEST FOR REZONING FROM THE AGRICULTURAL (A-1) DISTRICT TO THE MEDIUM INDUSTRIAL (M-2) DISTRICT ON PROPERTY LOCATED AT GEOPARCEL 7923.02.200.002.

WHEREAS, on August 13, 2026, the Planning and Zoning Commission held a Public Hearing to consider a request to rezone GeoParcel 7923.02.200.002 from the Agricultural (A-1) District to the Medium Industrial (M-2) District, the property is further described as follows:

THE NORTH FRACTIONAL OF THE NORTHEAST FRACTIONAL QUARTER OF SECTION 2, TOWNSHIP 79 NORTH, RANGE 23 WEST OF THE 5TH P.M., POLK COUNTY, IOWA, EXCEPT AN EXISTING TRACT THEREIN DESCRIBED AS FOLLOWS: BEGINNING AT THE NORTHEAST CORNER OF SAID SECTION 2, AND ASSUMING THE EAST LINE OF THE NORTHEAST QUARTER TO BE DUE NORTH AND SOUTH, THENCE SOUTH 272.9 FEET ALONG THE EAST LINE OF SAID NORTHEAST QUARTER; THENCE S89°43'W, 371.6 FEET; THENCE N0°23'W, 279.8 FEET TO THE NORTH LINE OF THE NORTHEAST QUARTER; TEHNCE S89°15'E, 373.5 FEET TO THE POINT OF BEGINNING. PROPERTY CONTAINS APPROXIMATELY 97.45 TAXABLE ACRES (ASSESSOR'S RECORDS) AND 2.81 ACRES OF PUBLIC RIGHT OF WAY (100.26 ACRES GROSS).

WHEREAS, the Planning and Zoning Commission has made the following findings:

1. That the change in zoning will maintain a consistency with the City's Future Land Use Map and Official Zoning Map.
2. That the change in zoning will maintain a consistency with adjacent land uses and provide a transition for adjacent zoning.
3. That the zoning change will not negatively impact the character of the neighborhood.

NOW, THEREFORE, BE IT RESOLVED, that the Planning and Zoning Commission of the City of Bondurant, Iowa, recommends City Council approval of the rezoning request from the Agricultural (A-1) District to the Medium Industrial (M-2) District for GeoParcel 7923.02.200.002.

Moved by _____Seconded by _____to adopt.

ATTEST: I, Isaac J. Pezley, City Planner, hereby certify that at a meeting of the Planning and Zoning Commission held on August 13, 2026, among other proceedings the above was adopted.

IN WITNESS WHEREOF, I have hereunto set my hand the day and year above written.

Isaac J. Pezley, City Planner

Action	Yay	Nay	Abstain	Absent
Keeran				
Vore				
Clayton				
Jennings				
Johnsen				
Pitt				
Torres				

Karen Keeran, Commission Chair

BUSINESS OF THE PLANNING AND ZONING COMMISSION
BONDURANT, IOWA
AGENDA STATEMENT

Item No. 6.c.
For Meeting of 8/13/2026
Public Hearing

TITLE: Public Hearing — Considering request to rezone Parcel 7923.02.200.002 from the Agricultural (A-1) District to the Medium Industrial (M-2) District.

CONTACT PERSON:

BRIEF HISTORY & ANALYSIS: The City of Bondurant has submitted a rezoning request for Parcel 7923.02.200.002, located to the west of Franklin Street SW and south of 15th Street SW. The rezoning request proposes to change the zoning from Agricultural (A-1) District to the Medium Industrial (M-2) District. This property is currently undeveloped and use for row crop agriculture. The request area is shown outlined below.

When considering rezoning requests, the Planning & Zoning Commission and City Council should take into account the following: the Comprehensive Plan/Future Land use Map, Zoning, Parkland Dedication, Streets, Pedestrian Connections, Utilities, the FEMA Floodplain, the City's Stream Buffer Ordinance, and Comments from City Officials and Private Utilities.

Comprehensive Plan/Future Land Use Map – The property in question is currently shown as Industrial on the Future Land Use Map. The properties to the north and east are shown as Business Park/Light Industrial. This future land use designation most closely translates to the City's M-2 Medium Industrial District. The request area is outlined in red below on the Future Land Use Map.

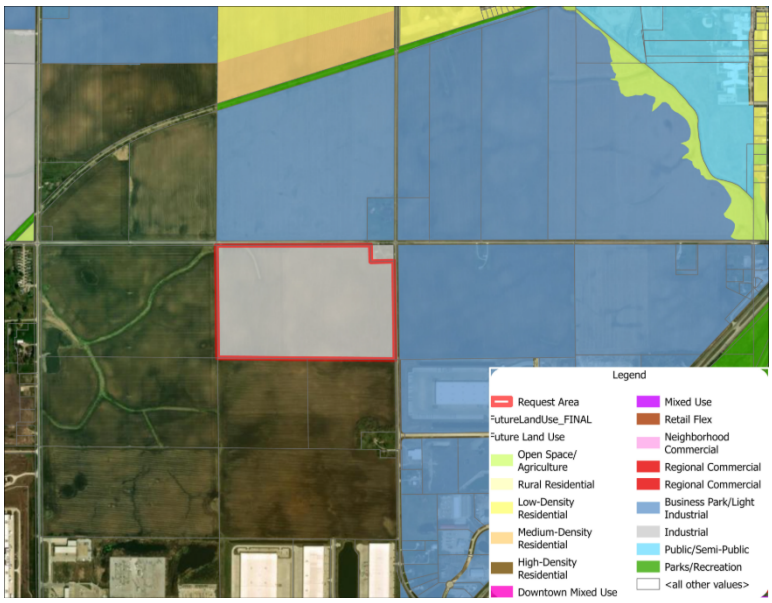

Zoning – Parcel 7923.02.200.002 is currently zoned as A-1 Agricultural and used for row crop agriculture. This use would be allowable as a legal non-conforming use if the property is successfully rezoned to the M-2 Medium Industrial District. The property to the north and east are currently zoned as A-1 Agricultural. The property to the east is currently being considered for a rezoning to the M-1 Limited Industrial District. The property to the southeast is currently zoned M-1 Limited Industrial and has been developed. The subject property is shown below in red.

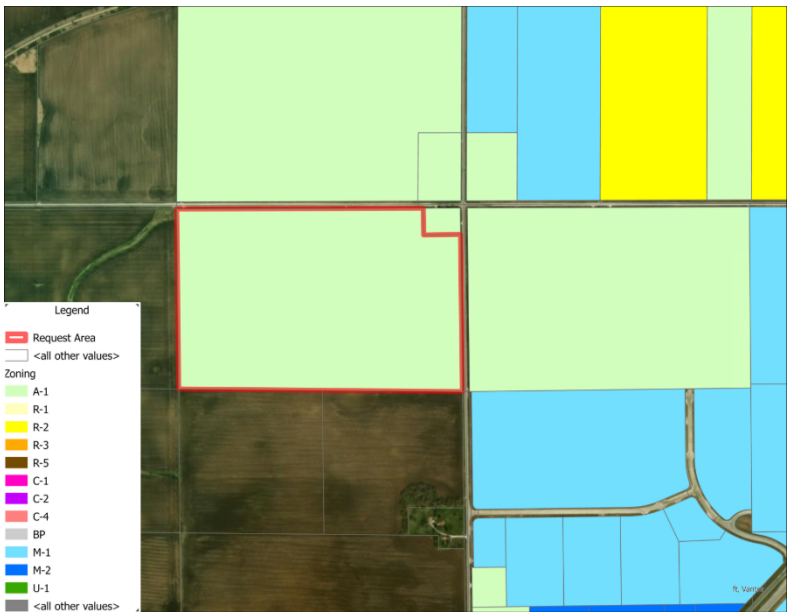

Parkland Dedication – Parkland dedication is not required for industrial developments.

Streets – Franklin Street SW is located on the property's eastern property line. 15th Street SW is accessible from the north.

Pedestrian Connections –Pedestrian connections throughout this parcel will be addressed during the platting process.

Utilities – All utilities will be addressed during the platting process.

FEMA Floodplain – this development is not located in the FEMA Floodplain area.

Stream Buffer Ordinance - this development is not subject to the City's Stream Buffer Ordinance.

Comments from City Officials and Utilities -

- City Engineering – No comments received at this time.
- Public Works – No comments received at this time.
- Emergency Services – No comments received at this time.

FUNDING SOURCE:

STAFF RECOMMENDATION:

APPROVED FOR SUBMITTAL:

ATTACHMENTS: None

BUSINESS OF THE PLANNING AND ZONING COMMISSION
BONDURANT, IOWA
AGENDA STATEMENT

Item No. 6.d.
For Meeting of 8/13/2026
Resolution

TITLE: Resolution PZ-260813-27 — Considering request to rezone Parcel 7923.02.200.002 from the Agricultural (A-1) District to the Medium Industrial (M-2) District.

CONTACT PERSON:

BRIEF HISTORY & ANALYSIS: See Item 6.c.

FUNDING SOURCE:

STAFF RECOMMENDATION: The following options exist for the Planning & Zoning Commission:

1. Recommended approval of Resolution No. PZ-260813-27, regarding recommended approval of the rezoning request.
2. Recommended approval of Resolution No. PZ-260813-27, regarding recommended approval of the rezoning request, subject to Code clarification items being addressed.
3. Recommended denial of Resolution No. PZ-260813-27, regarding recommended approval of the rezoning request
4. Table pending additional information.

APPROVED FOR SUBMITTAL:

ATTACHMENTS:
1. RES. NO. PZ-260813-27

PLANNING AND ZONING COMMISSION
RESOLUTION NO. PZ-260813-26

RESOLUTION REGARDING RECOMMENDED APPROVAL OF THE REQUEST FOR REZONING FROM THE AGRICULTURAL (A-1) DISTRICT TO THE MEDIUM INDUSTRIAL (M-2) DISTRICT ON PROPERTY LOCATED AT GEOPARCEL 7923.02.200.002.

WHEREAS, on August 13, 2026, the Planning and Zoning Commission held a Public Hearing to consider a request to rezone GeoParcel 7923.02.200.002 from the Agricultural (A-1) District to the Medium Industrial (M-2) District, the property is further described as follows:

THE NORTH FRACTIONAL OF THE NORTHEAST FRACTIONAL QUARTER OF SECTION 2, TOWNSHIP 79 NORTH, RANGE 23 WEST OF THE 5TH P.M., POLK COUNTY, IOWA, EXCEPT AN EXISTING TRACT THEREIN DESCRIBED AS FOLLOWS: BEGINNING AT THE NORTHEAST CORNER OF SAID SECTION 2, AND ASSUMING THE EAST LINE OF THE NORTHEAST QUARTER TO BE DUE NORTH AND SOUTH, THENCE SOUTH 272.9 FEET ALONG THE EAST LINE OF SAID NORTHEAST QUARTER; THENCE S89°43'W, 371.6 FEET; THENCE N0°23'W, 279.8 FEET TO THE NORTH LINE OF THE NORTHEAST QUARTER; TEHNCE S89°15'E, 373.5 FEET TO THE POINT OF BEGINNING. PROPERTY CONTAINS APPROXIMATELY 97.45 TAXABLE ACRES (ASSESSOR'S RECORDS) AND 2.81 ACRES OF PUBLIC RIGHT OF WAY (100.26 ACRES GROSS).

WHEREAS, the Planning and Zoning Commission has made the following findings:

1. That the change in zoning will maintain a consistency with the City's Future Land Use Map and Official Zoning Map.
2. That the change in zoning will maintain a consistency with adjacent land uses and provide a transition for adjacent zoning.
3. That the zoning change will not negatively impact the character of the neighborhood.

NOW, THEREFORE, BE IT RESOLVED, that the Planning and Zoning Commission of the City of Bondurant, Iowa, recommends City Council approval of the rezoning request from the Agricultural (A-1) District to the Medium Industrial (M-2) District for GeoParcel 7923.02.200.002.

Moved by _____Seconded by _____to adopt.

ATTEST: I, Isaac J. Pezley, City Planner, hereby certify that at a meeting of the Planning and Zoning Commission held on August 13, 2026, among other proceedings the above was adopted.

IN WITNESS WHEREOF, I have hereunto set my hand the day and year above written.

Isaac J. Pezley, City Planner

Action	Yay	Nay	Abstain	Absent
Keeran				
Vore				
Clayton				
Jennings				
Johnsen				
Pitt				
Torres				

Karen Keeran, Commission Chair

BUSINESS OF THE PLANNING AND ZONING COMMISSION
BONDURANT, IOWA
AGENDA STATEMENT

Item No. 6.e.
For Meeting of 8/13/2026
Resolution

TITLE: Resolution PZ-260813-28 — Considering recommended approval of the site plan for 2340 Hubbell Avenue SW.

CONTACT PERSON:

BRIEF HISTORY & ANALYSIS: The City is in receipt of a site plan for review by the Planning & Zoning Commission and City Council for the proposed building at 2340 Hubbell Avenue SW. The site plan applicant and developer of the property is Midstates Precast Products Inc. The site plan was prepared by CDA. The applicant is proposing a 140’x63’4” structure that would enclose an existing production area. A site plan was submitted in 2022 that included the structure being considered. A building permit was not pulled for the building within 24-months of the site plan being approved resulting in the expiration of the site plan. This property is zoned as being within the City's Limited Industrial (M-1) District. The property in question is outlined below in red.

When the Planning & Zoning Commission and City Council review site plans, they review for consistency with the following documents: Comprehensive Plan; Zoning

Code; and Comments from City Officials.

*Consistency with the City's Comprehensive Plan:*The 2022 Comprehensive Plan guides for Business Park/Industrial development in this area. The use of the property is not changing or being expanded upon. The property in question is outlined in red below.

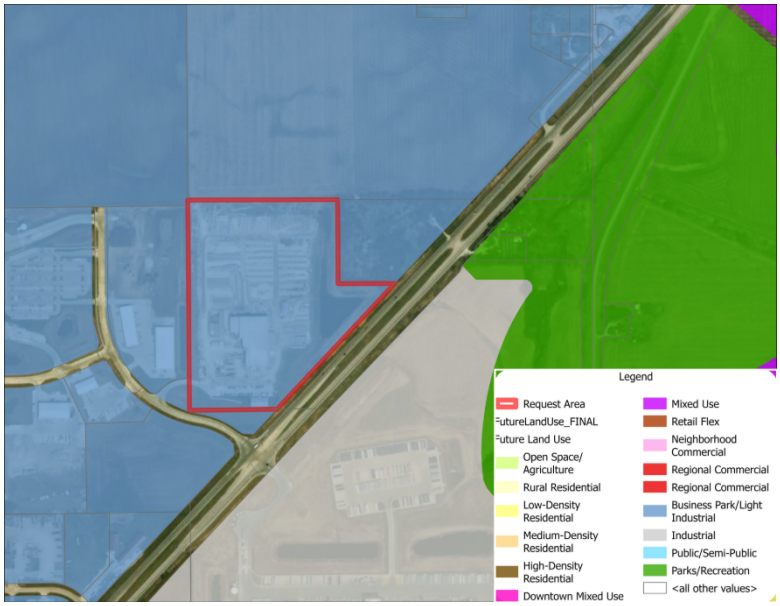

Consistency with the City's Zoning Code:

The property in questions is currently zoned as M-1 Limited Industrial. All adjacent properties are also currently zoned as M-1 Limited Industrial or have an active request to rezone to the M-1 Limited Industrial District. The current use of the property is General Manufacturing which is allowable in the M-1 District as a Conditional Use. The use of the property will not change with the proposed structure. The subject property is outlined in red below.

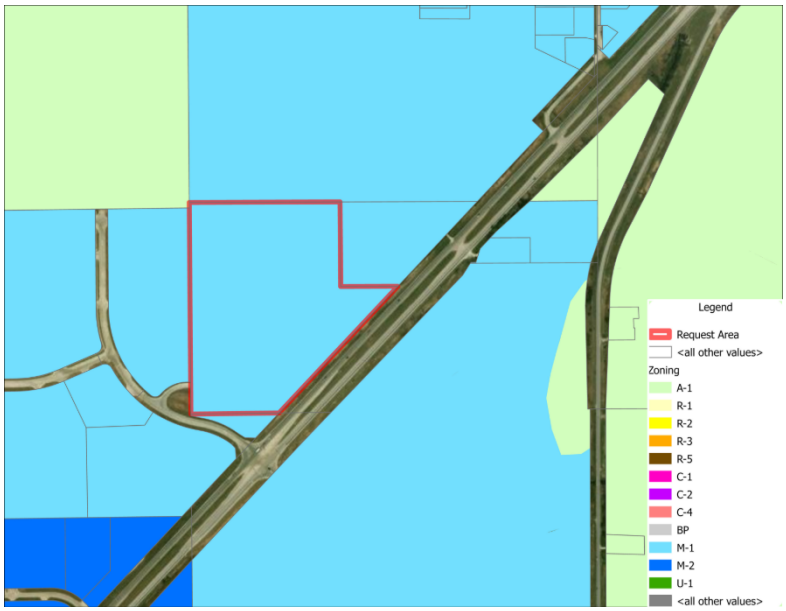

General Use & Bulk Standards

- The site plan states setback requirements on page 2.
- There is existing outdoor storage on site, the proposed structure would decrease the amount of outdoor storage/manufacturing taking place on site.
- The site plan shows an existing access point from Shiloh Rose Parkway SW.

Parking/Drive Areas

- Access to the site is available from Shiloh Rose Parkway SW. The property also has street frontage on Hubbell Avenue.
- The site plan shows a parking area with 70 spaces, the proposed structure will not create additional employees. For this reason, additional parking spaces are not required.

Stormwater, Utilities & Natural Features

- A stormwater management report was submitted for the site in 2022. That stormwater report included the concrete pad the structure will be enclosing. Staff has requested a letter from CDA stating this stormwater management report is valid and the existing detention basin is large enough to handle runoff from the proposed structure.
- The site is not located within FEMA's 100-year floodplain.
- This site is not located within the City's Stream Buffer Ordinance area.

ARCHITECTURAL STANDARDS

- Architectural elevations have been submitted to staff.
- The applicant received a variance in November 2022 stating architectural elevations for all future building must match the elevations of the primary structure on site. A copy of the variance permit has been attached for Commission review.

Other Site Plan Features

- A landscaping plan was previously submitted and approved. Additional landscaping will not be required for this site plan.

Comments from City Officials:

The following City departments were notified of the submitted site plan:

1. Public Works - reviewed and no comments have been received at this time.
2. Engineering – still being reviewed by engineering staff.
3. Fire Department - reviewed and no comments have been received at this time.

FUNDING SOURCE:

STAFF RECOMMENDATION: The following options exist for the Planning & Zoning Commission:

1. Recommended approval of RESOLUTION NO. PZ-260813-28.
2. Recommended approval of RESOLUTION NO. PZ-260813-28, subject to certain Zoning Code clarification items being addressed.
3. Recommended denial of RESOLUTION NO. PZ-260813-28.
4. Table pending additional information.

APPROVED FOR SUBMITTAL:

ATTACHMENTS:

1. RESOLUTION NO. PZ-260813-28
2. Midstates Precast Products - Phase 2 - Site Plan
3. MPP 40 A1.1 South
4. MPP 40 A1.2 North
5. MPP 40 A1.3 East West
6. Building Schematics
7. BOA Permit - Case #97

PLANNING AND ZONING COMMISSION
RESOLUTION NO. PZ-260813-28

RESOLUTION REGARDING RECOMMENDED APPROVAL OF THE SITE PLAN FOR 2340 HUBBELL AVENUE SW.

WHEREAS, Midstates Precast Productions Inc has submitted the site plan for 2340 Hubbell Avenue SW described as follows;

THAT PART OF THE SOUTH 81.50 ACRES OF THE NE FRACTIONAL ¼ OF SECTION 1, TOWNSHIP 79 NORTH, RANGE 23 WEST OF THE 5TH P.M., NOW INCLUDED IN AND FORMING A PART OF THE CITY OF BONDURANT, POLK COUNTY, IOWA, BEING MORE PARTICULARLY DESCRIBED AS PARCEL "A" ON THE PLAT OF SURVEY FILED JULY 30, 1979 IN BOOK 4937 AT PAGE 244 IN THE OFFICE OF THE POLK COUNTY RECORDER, POLK COUNTY, IOWA.

WHEREAS, the zoning for the property is Limited Industrial (M-1) and General Manufacturing use is a conditional use of the Zoning Code;

NOW, THEREFORE, BE IT RESOLVED, that the Planning & Zoning Commission recommends approval of the submitted site plan for 2340 Hubbell Avenue SW subject to the following City Code/Policy clarification recommendation items;

1. Site Plan shall be updated to reflect any comments received from Engineering.

Moved by _____, Seconded by _____to adopt.

ATTEST: I, Isaac Pezley, City Planner, City of Bondurant, hereby certify that at a meeting of the Planning and Zoning Commission held on August 13, 2026; among other proceedings the above was recommended.

IN WITNESS WHEREOF, I have hereunto set my hand the day and year above written.

_____
Isaac J. Pezley, City Planner

Action	Yay	Nay	Abstain	Absent
Keeran				
Vore				
Clayton				
Jennings				
Johnsen				
Pitt				
Torres				

_____

Karen Keeran, Commission Chair

SITE PLAN FOR:

MIDSTATES PRECAST PRODUCTS - PHASE 2

BONDURANT, IOWA

VICINITY MAP

NOT TO SCALE

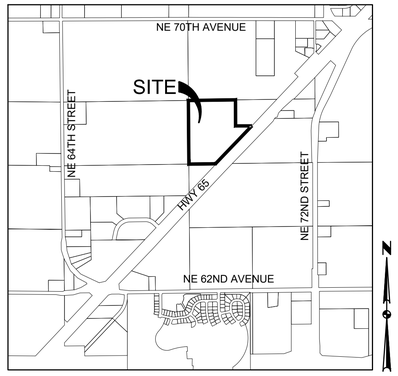

LEGAL DESCRIPTION

THAT PART OF THE SOUTH 81.50 ACRES OF THE NE FRACTIONAL ¼ OF SECTION 1, TOWNSHIP 79 NORTH, RANGE 23 WEST OF THE 5TH P.M., NOW INCLUDED IN AND FORMING A PART OF THE CITY OF BONDURANT, POLK COUNTY, IOWA, BEING MORE PARTICULARLY DESCRIBED AS PARCEL "A" ON THE PLAT OF SURVEY FILED JULY 30, 1979 IN BOOK 4937 AT PAGE 244 IN THE OFFICE OF THE POLK COUNTY RECORDER, POLK COUNTY, IOWA.

INDEX OF SHEETS

NO.	DESCRIPTION
1	COVER SHEET
2	DIMENSION PLAN
3	GRADING & UTILITY PLAN

GENERAL LEGEND

PROPOSED

- PROJECT BOUNDARY
- LOT LINE
- SECTION LINE
- CENTER LINE
- RIGHT OF WAY — R/W —
- PERMANENT EASEMENT — P/E —
- TEMPORARY EASEMENT — T/E —
- TYPE SW-501 STORM INTAKE
- TYPE SW-503 STORM INTAKE
- TYPE SW-505 STORM INTAKE
- TYPE SW-506 STORM INTAKE
- TYPE SW-513 STORM INTAKE
- TYPE SW-401 STORM MANHOLE
- TYPE SW-402 STORM MANHOLE
- TYPE SW-301 SANITARY MANHOLE
- STORM/SANITARY CLEANOUT
- WATER VALVE
- FIRE HYDRANT ASSEMBLY
- SIGN
- DETECTABLE WARNING PANEL
- STORM SEWER STRUCTURE NO. — ST-10
- STORM SEWER PIPE NO. — L-10
- SANITARY SEWER STRUCTURE NO. — S-10
- SANITARY SEWER PIPE NO. — P-10
- SANITARY SEWER WITH SIZE — 8"S
- SANITARY SERVICE — S — S — S
- STORM SEWER
- STORM SERVICE — ST — ST
- WATERMAIN WITH SIZE — 8"W
- WATER SERVICE — W — W
- SAWCUT (FULL DEPTH)
- SILT FENCE

EXISTING

- SANITARY MANHOLE
- WATER VALVE BOX
- FIRE HYDRANT
- WATER CURB STOP
- WELL
- STORM SEWER MANHOLE
- STORM SEWER SINGLE INTAKE
- STORM SEWER DOUBLE INTAKE
- FLARED END SECTION
- ROOF DRAIN/ DOWNSPOUT
- DECIDUOUS TREE
- CONIFEROUS TREE
- DECIDUOUS SHRUB
- CONIFEROUS SHRUB
- ELECTRIC POWER POLE
- GUY ANCHOR
- STREET LIGHT
- POWER POLE W/ TRANSFORMER
- UTILITY POLE W/ LIGHT
- ELECTRIC BOX
- ELECTRIC TRANSFORMER
- ELECTRIC MANHOLE OR VAULT
- TRAFFIC SIGN
- TELEPHONE JUNCTION BOX
- TELEPHONE MANHOLE/VAULT
- TELEPHONE POLE
- GAS VALVE BOX
- CABLE TV JUNCTION BOX
- CABLE TV MANHOLE/VAULT
- MAIL BOX
- BENCHMARK
- SOIL BORING
- UNDERGROUND TV CABLE — TV —
- GAS MAIN — G —
- FIBER OPTIC — FO —
- UNDERGROUND TELEPHONE — T —
- OVERHEAD ELECTRIC — OE —
- UNDERGROUND ELECTRIC — E —
- FIELD TILE — TILE —
- SANITARY SEWER W/ SIZE — 8"S
- STORM SEWER W/ SIZE — 15" RCP
- WATER MAIN W/ SIZE — 8"W

OWNER / APPLICANT

GSC PROPERTIES LLC
CONTACT: FRED LARSON
1300 LINCOLN STREET
WEST DES MOINES, IOWA 50265
PH. (515) 729-3383

PARKING CALCULATIONS

ONE SPACE PER EMPLOYEE

59 EMPLOYEES

PARKING PROVIDED =70 SPACES

ENGINEER

CIVIL DESIGN ADVANTAGE, LLC
CONTACT: ERIN OLLENDIKE
4121 NW URBANDALE DRIVE
URBANDALE, IOWA 50322
PH. (515) 369-4400
FX. (515) 369-4410

OPEN SPACE CALCULATIONS

SITE AREA	=1,306,739 SF
OPEN SPACE REQUIRED	=196,011 (15%)
OPEN SPACE PROVIDED	=726,672 (56%)

SITE ADDRESS

2340 HUBBELL AVENUE SW

SURVEYOR

CIVIL DESIGN ADVANTAGE, LLC
CONTACT: CHARLIE MCGLOTHLEN
4121 NW URBANDALE DRIVE
URBANDALE, IOWA 50322
PH. (515) 369-4400
FX. (515) 369-4410

IOWA ONE CALL
1-800-292-8989
www.iowaonecall.com
811 Know what's below. Call before you dig.

DATE OF SURVEY

NOVEMBER 7, 2017

UTILITY WARNING

ANY UTILITIES SHOWN HAVE BEEN LOCATED FROM FIELD SURVEY AND RECORDS OBTAINED BY THIS SURVEYOR. THE SURVEYOR MAKES NO GUARANTEE THAT THE UTILITIES SHOWN COMPRISE ALL THE UTILITIES IN THE AREA, EITHER IN SERVICE OR ABANDONED. THE SURVEYOR FURTHER DOES NOT WARRANT THAT THE UTILITIES SHOWN ARE IN THE EXACT LOCATION SHOWN.

BENCHMARKS

NGS BENCHMARK MH0385 100' +/- SOUTH OF 78TH AVENUE, 11' +/- EAST OF RAILROAD, 1.9 MILES SOUTH OF ENTERPRISE.
ELEVATION938.93

5/8" REBAR W/CONTROL POINT POST, 20' +/- SOUTHWEST OF SOUTHEAST PROPERTY CORNER.
ELEVATION=957.50

RAILROAD SPIKE IN FENCE POST 100' +/- WEST OF SOUTHEAST PROPERTY CORNER.
ELEVATION=960.11

SUBMITTAL DATES

-SITE PLAN SUBMITTAL TO CITY #1:	08/12/2022
-SITE PLAN SUBMITTAL TO CITY #2:	08/29/2022
-SITE PLAN SUBMITTAL TO CITY #2:	09/16/2022

CIVIL DESIGN ADVANTAGE
4121 NW URBANDALE DR. URBANDALE, IOWA 50322
PH: (515) 369-4400 Fax: (515) 369-4410
PROJECT NO. 2111.891

THE PROJECT REQUIRES AN IOWA NPDES PERMIT #2 AND CITY OF BONDURANT GRADING PERMIT. CIVIL DESIGN ADVANTAGE WILL PROVIDE THE PERMITS AND THE INITIAL STORM WATER POLLUTION PREVENTION PLAN (SWPPP) FOR THE CONTRACTORS USE DURING CONSTRUCTION. THE CONTRACTOR SHALL BE RESPONSIBLE FOR UPDATING THE SWPPP THROUGHOUT CONSTRUCTION AND MEETING LOCAL, STATE AND FEDERAL REQUIREMENTS.

ALL CONSTRUCTION MATERIALS, DUMPSTERS, DETACHED TRAILERS OR SIMILAR ITEMS ARE PROHIBITED ON PUBLIC STREETS OR WITHIN THE PUBLIC R.O.W.

THE 2022 EDITION OF THE SUDAS STANDARD SPECIFICATIONS, THE PUBLIC RIGHTS-OF-WAY ACCESSIBILITY GUIDELINES (PROWAG) AND ALL CITY SUPPLEMENTALS, IF APPLICABLE, SHALL APPLY TO ALL WORK ON THIS PROJECT UNLESS OTHERWISE NOTED.

THIS DESIGN SPECIFICALLY PREPARED FOR USE AT THE LOCATION SHOWN. USE IN ANY OTHER MANNER EXCEEDS THE INTENDED PURPOSE OF THESE DRAWINGS AND ANY ACCOMPANYING SPECIFICATIONS.

LICENSED PROFESSIONAL ENGINEER
ERIN K. OLLENDIKE
16926
IOWA

I HEREBY CERTIFY THAT THIS ENGINEERING DOCUMENT WAS PREPARED BY ME OR UNDER MY DIRECT PERSONAL SUPERVISION AND THAT I AM A DULY LICENSED PROFESSIONAL ENGINEER UNDER THE LAWS OF THE STATE OF IOWA.

PRELIMINARY NOT FOR CONSTRUCTION

ERIN K. OLLENDIKE, P.E. DATE

MY LICENSE RENEWAL DATE IS DECEMBER 31, 2023
PAGES OR SHEETS COVERED BY THIS SEAL:
SHEETS 1-3

MIDSTATES PRECAST PRODUCTS - PHASE 2

FILE: H:\2021\2111891\DWG\2111891-SITE.DWG
PLOTTED BY: RYAN LUNDHOLM DATE PLOTTED: 9/16/2022 2:05 PM
TECH:
COMMENT:
ENG:

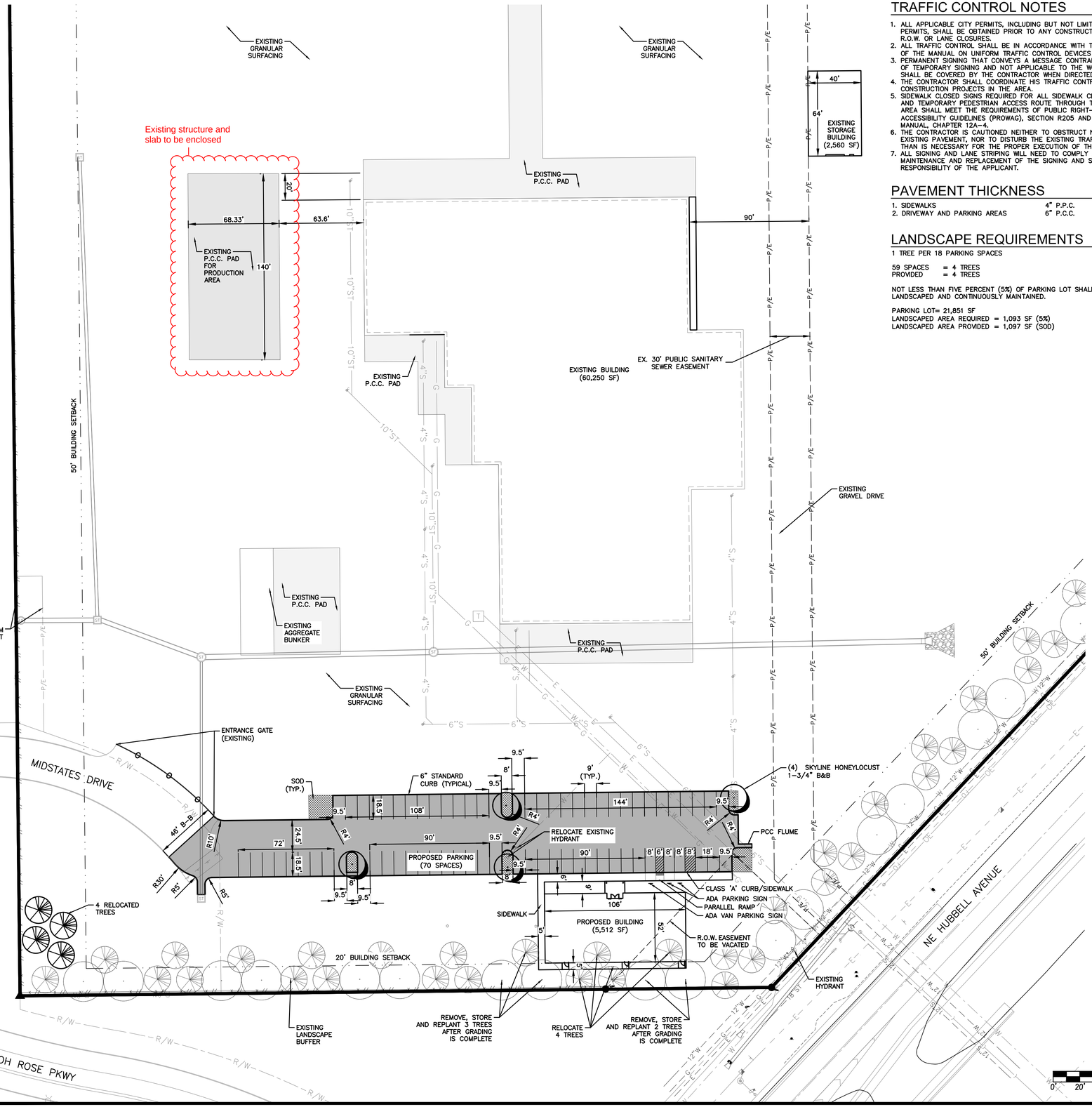

TRAFFIC CONTROL NOTES

1. ALL APPLICABLE CITY PERMITS, INCLUDING BUT NOT LIMITED TO CLOSURE PERMITS, SHALL BE OBTAINED PRIOR TO ANY CONSTRUCTION WITHIN CITY R.O.W. OR LANE CLOSURES.
2. ALL TRAFFIC CONTROL SHALL BE IN ACCORDANCE WITH THE LATEST EDITION OF THE MANUAL ON UNIFORM TRAFFIC CONTROL DEVICES (MUTCD).
3. PERMANENT SIGNING THAT CONVEYS A MESSAGE CONTRARY TO THE MESSAGE OF TEMPORARY SIGNING AND NOT APPLICABLE TO THE WORKING CONDITIONS SHALL BE COVERED BY THE CONTRACTOR WHEN DIRECTED BY THE CITY.
4. THE CONTRACTOR SHALL COORDINATE HIS TRAFFIC CONTROL WITH OTHER CONSTRUCTION PROJECTS IN THE AREA.
5. SIDEWALK CLOSED SIGNS REQUIRED FOR ALL SIDEWALK CLOSURES. SIGNAGE AND TEMPORARY PEDESTRIAN ACCESS ROUTE THROUGH THE CONSTRUCTION AREA SHALL MEET THE REQUIREMENTS OF PUBLIC RIGHT-OF-WAY ACCESSIBILITY GUIDELINES (PROWAG), SECTION R205 AND IOWA DOT DESIGN MANUAL, CHAPTER 12A-4.
6. THE CONTRACTOR IS CAUTIONED NEITHER TO OBSTRUCT NOR REMOVE ANY EXISTING PAVEMENT, NOR TO DISTURB THE EXISTING TRAFFIC PATTERNS MORE THAN IS NECESSARY FOR THE PROPER EXECUTION OF THE WORK.
7. ALL SIGNING AND LANE STRIPING WILL NEED TO COMPLY WITH MUTCD. MAINTENANCE AND REPLACEMENT OF THE SIGNING AND STRIPING WILL BE THE RESPONSIBILITY OF THE APPLICANT.

PAVEMENT THICKNESS

1. SIDEWALKS	4" P.P.C.
2. DRIVEWAY AND PARKING AREAS	6" P.C.C.

LANDSCAPE REQUIREMENTS

1 TREE PER 18 PARKING SPACES

59 SPACES = 4 TREES
PROVIDED = 4 TREES

NOT LESS THAN FIVE PERCENT (5%) OF PARKING LOT SHALL BE LANDSCAPED AND CONTINUOUSLY MAINTAINED.

PARKING LOT= 21,851 SF
LANDSCAPED AREA REQUIRED = 1,093 SF (5%)
LANDSCAPED AREA PROVIDED = 1,097 SF (SOD)

GENERAL NOTES

1. THE 2021 EDITION OF THE SUDAS STANDARD SPECIFICATIONS AND ALL CITY SUPPLEMENTALS, IF APPLICABLE, SHALL APPLY TO ALL WORK ON THIS PROJECT UNLESS OTHERWISE NOTED.
2. ALL WORK SHALL COMPLY WITH ADA ACCESSIBILITY GUIDELINES FOR BUILDINGS AND FACILITIES.
3. ALL WORK SHALL BE IN ACCORDANCE WITH OSHA CODES AND STANDARDS. NOTHING INDICATED ON THE DRAWINGS SHALL RELIEVE THE CONTRACTOR FROM COMPLYING WITH ANY APPROPRIATE SAFETY REGULATIONS.
4. PRIOR TO ANY WORK AT THE SITE, CONTRACTOR SHALL EXAMINE ANY APPLICABLE DRAWINGS AVAILABLE FROM THE OWNER, ENGINEER, AND/OR ARCHITECT, AND CONSULT WITH OWNER'S PERSONNEL AND UTILITY COMPANY REPRESENTATIVES. NO COMPENSATION WILL BE ALLOWED FOR DAMAGE FROM FAILURE TO COMPLY WITH THIS REQUIREMENT.
5. ONE WEEK PRIOR TO CONSTRUCTION WITHIN CITY R.O.W. OR ANY CONNECTION TO PUBLIC SEWERS CONTRACTOR SHALL NOTIFY THE CITY'S CONSTRUCTION DIVISION.
6. ALL CONSTRUCTION WITHIN PUBLIC R.O.W./ EASEMENTS, AND/OR ANY CONNECTION TO PUBLIC SEWERS AND STREETS, SHALL COMPLY WITH THE CITY'S STANDARDS.
7. ALL DIMENSIONS ARE TO BACK OF CURB, BUILDING FACE OR PROPERTY LINE UNLESS OTHERWISE NOTED.
8. CONTRACTOR TO VERIFY BUILDING DIMENSIONS WITH ARCHITECTURAL PLANS.
9. PLACE 3/4 INCH EXPANSION JOINT BETWEEN ALL P.C.C. PAVEMENT/SIDEWALKS AND BUILDING. PLACE 1/2 INCH EXPANSION JOINT BETWEEN SIDEWALKS AND P.C.C. PAVEMENT.
10. REMOVE ALL DEBRIS SPILLED INTO R.O.W. AT THE END OF EACH WORK DAY.
11. ALL PROPERTY PINS SHALL BE PROTECTED FROM GRADING OR OTHER OPERATIONS. ANY PINS DISTURBED SHALL BE RESET AT THE CONTRACTOR'S EXPENSE.
12. DO NOT STORE CONSTRUCTION MATERIALS AND EQUIPMENT IN THE RIGHT OF WAY.
13. THE CONTRACTOR SHALL NOT DISTURB DESIRABLE GRASS AREAS AND DESIRABLE TREES OUTSIDE THE CONSTRUCTION LIMITS. THE CONTRACTOR WILL NOT BE PERMITTED TO PARK OR SERVICE VEHICLES AND EQUIPMENT OR USE THESE AREAS FOR STORAGE OF MATERIALS. STORAGE, PARKING AND SERVICE AREAS WILL BE SUBJECT TO THE APPROVAL OF THE OWNER.
14. THE CONTRACTOR IS RESPONSIBLE FOR REPLACING ANY AREAS OF PAVEMENT OR SIDEWALK NOT TO BE REMOVED THAT IS DAMAGED DUE TO OPERATING EQUIPMENT ON THE PAVEMENT OR SIDEWALK.
15. THE CONTRACTOR MAY BE REQUIRED TO PLACE TEMPORARY WARNING DEVICES AND SAFETY FENCE AT CERTAIN LOCATIONS WHERE REPLACEMENT FEATURES ARE NOT INSTALLED THE SAME DAY, AS DIRECTED BY THE ENGINEER OR THE CITY.
16. THE GENERAL CONTRACTOR SHALL BE RESPONSIBLE FOR THE COORDINATION OF WORK BETWEEN SUPPLIERS AND SUBCONTRACTORS INVOLVED IN THE PROJECT, INCLUDING STAGING OF CONSTRUCTION DETAILS.
17. CONCRETE REMOVAL FOR DRIVEWAY APPROACHES SHALL BE REMOVED TO THE NEAREST TRANSVERSE JOINT. CONTRACTOR SHALL VERIFY REMOVAL LIMITS WITH CITY'S CONSTRUCTION INSPECTOR PRIOR TO ANY CONCRETE REMOVAL.
18. ALL SCOUR STOP SHALL BE INSTALLED BY A CERTIFIED CONTRACTOR ACCORDING TO SCOUR STOP PRODUCT SPECIFICATIONS.
19. ALL PERMITS AND ADDITIONAL FEES REQUIRED TO COMPLETE THE WORK SHALL BE INCLUDED IN THE CONTRACTOR BID.
20. THE EXISTING RIGHT OF WAY EASEMENT WILL NEED TO BE VACATED.

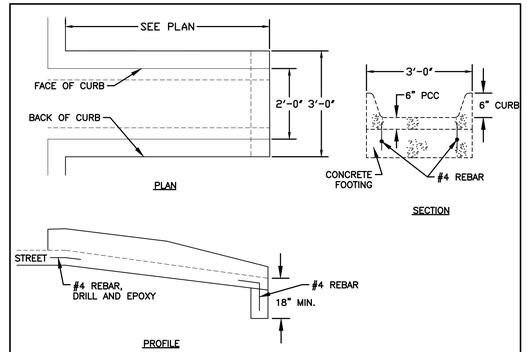

CONCRETE LETDOWN FLUME

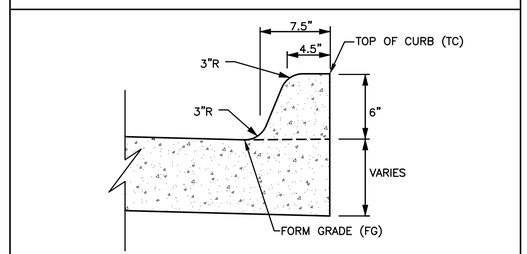

6" PCC INTEGRAL CURB

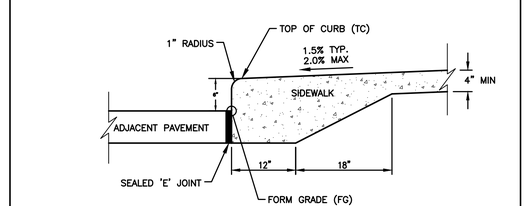

CLASS "A" INTEGRAL CURB AND SIDEWALK

REVISIONS	DATE
THIRD SUBMITTAL	09/16/22
SECOND SUBMITTAL	08/29/22
FIRST SUBMITTAL	08/12/22

3405 S.E. CROSSROADS DRIVE, SUITE G
GRIMES, IOWA 50111
PHONE: (515) 369-4400 FAX: (515) 369-4410

ENGINEER: EKO | EI: GH

CIVIL DESIGN ADVANTAGE

MIDSTATES PRECAST PRODUCTS - PHASE 2
DIMENSION PLAN

BONDURANT, IOWA

2/3

2111.891

FILE: H:\2021\211891\DWG\211891-SITE.DWG
REFERENCE: 211891-XREF-SITE; 9/16/2022 2:05 PM
PLOTTED BY: RYAN LUNDHOLM
PLOTTED: 9/16/2022 2:05 PM
COMMENT:
ENG:
TECH:

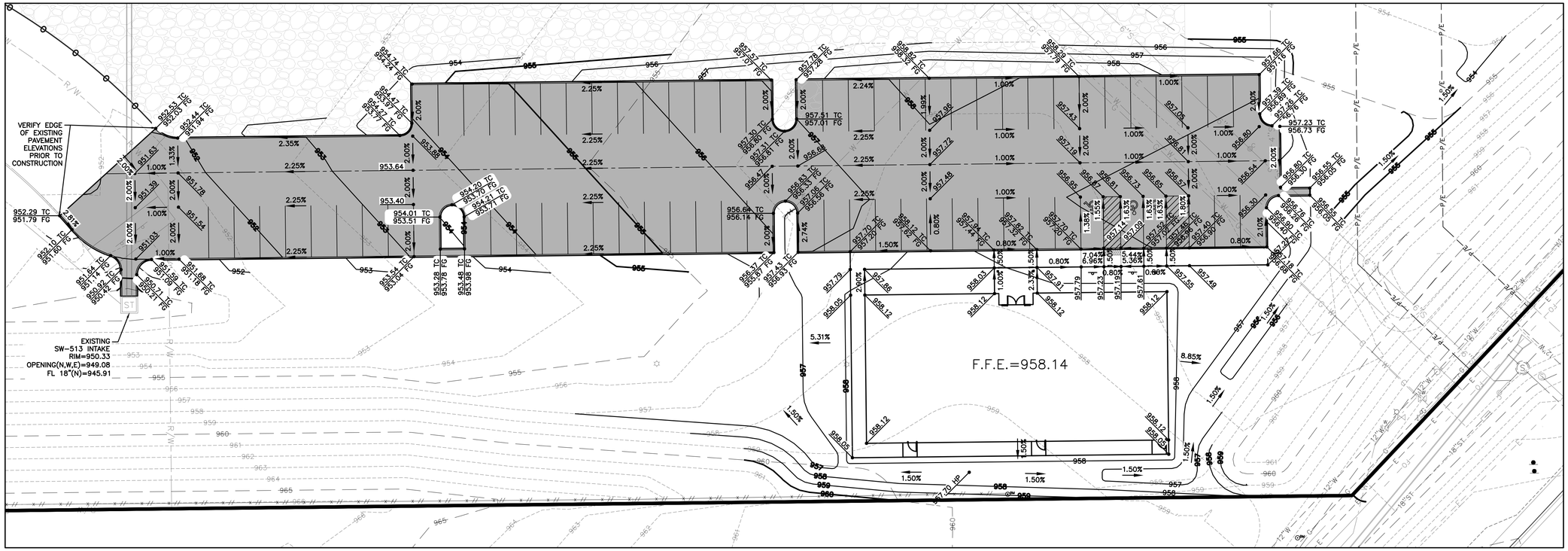

GRADING PLAN

GRADING NOTES

1. PRIOR TO ANY GRADING, A COPY OF THE NPDES PERMIT SHALL BE PROVIDED TO THE CITY'S BUILDING DIVISION.
2. CONTRACTOR SHALL STRIP ALL DELETERIOUS MATERIAL. THE TOP 6" OF TOPSOIL IS TO BE STOCKPILED AND RESPREAD AFTER GRADING IS COMPLETE. CONTRACTOR WILL BE RESPONSIBLE FOR PROVIDING A SUITABLE TOPSOIL STOCKPILE SITE.
3. EXCAVATION SHALL BE IN ACCORDANCE WITH THE 2022 EDITION OF THE SUDAS STANDARD SPECIFICATIONS AND ALL CITY SUPPLEMENTALS, IF APPLICABLE,
4. MATCH EXISTING GRADES AT PROPERTY LINES AND/OR CONSTRUCTION LIMITS.
5. ALL SPOT ELEVATIONS ARE FORM GRADE (FG) OR TOP OF FINISHED SURFACES UNLESS OTHERWISE NOTED.
6. SITE SHALL BE GRADED TO PROVIDE POSITIVE DRAINAGE AWAY FROM BUILDINGS.
7. SLOPES IN PAVEMENT SHALL BE UNIFORM TO AVOID PONDING.
8. THE CONTRACTOR SHALL CONFINE HIS GRADING OPERATIONS TO WITHIN THE CONSTRUCTION LIMITS AND EASEMENTS SHOWN ON THE PLANS. ANY DAMAGE TO PROPERTIES OUTSIDE THE SITE BOUNDARY SHALL BE AT THE SOLE RESPONSIBILITY OF THE CONTRACTOR.
9. THE CONTRACTOR SHALL APPLY NECESSARY MOISTURE CONTROL TO THE CONSTRUCTION AREA AND HAUL ROADS TO PREVENT THE SPREAD OF DUST.
10. REFER TO SEPARATE STORM WATER POLLUTION PREVENTION PLAN FOR DETAILS ON EROSION CONTROL.
11. FINAL FINISH GRADING TO BE APPROVED BY THE ARCHITECT AND CIVIL ENGINEER. MATCH EXISTING GRADES AT THE INTERFACE OF NEW AND EXISTING GRADES OR PAVING.
12. SIDEWALKS:
    MAINTAIN 5% MAXIMUM LONGITUDINAL SLOPES ON ALL PAVED WALKWAYS. ALL WALKS TO HAVE 2.0% MAXIMUM TRANSVERSE SLOPE IN THE DIRECTION OF NATURAL DRAINAGE. SAW CUT JOINTS AS SOON AS CONCRETE HAS SET. SAW CUTS TO BE 1/8" TO 1/4" WIDE; DEPTH: LONGITUDINAL T/3, TRANSVERSE T/4.

UTILITY NOTES

1. REFER TO MECHANICAL, ELECTRICAL AND PLUMBING PLANS FOR UTILITY SERVICE SIZES AND EXACT LOCATIONS. REFER TO ELECTRICAL PLANS FOR ELECTRIC AND TELEPHONE SERVICE CONSTRUCTION DETAILS. REFER TO MECHANICAL PLANS FOR GAS SERVICE CONSTRUCTION DETAILS.
2. FIELD VERIFY ELEVATIONS AND LOCATIONS OF ALL CONNECTIONS TO EXISTING UTILITIES PRIOR TO COMMENCING CONSTRUCTION.
3. PROVIDE TEMPORARY SUPPORT FOR EXISTING UTILITY LINES THAT ARE ENCOUNTERED DURING CONSTRUCTION UNTIL BACKFILLING IS COMPLETE.
4. BACKFILL ALL UTILITY TRENCHES ACCORDING TO THE 2022 EDITION OF THE SUDAS STANDARD SPECIFICATIONS AND ALL CITY SUPPLEMENTALS. MAINTAIN A MINIMUM OF 5.5' COVER OVER ALL WATERMAINS.
5. ALL UTILITIES SHALL BE STUBBED TO 5 FEET FROM BUILDINGS. REFER TO MEP PLANS FOR DESIGN FROM 5' OUTSIDE OF BUILDING FACE.
6. ADJUST ALL MANHOLES AND INTAKES TO FINISHED GRADES.
7. ALL SANITARY SEWER AND WATER SERVICES SHALL BE CONSTRUCTED IN ACCORDANCE WITH THE CITY'S PLUMBING CODE.
8. 18" MINIMUM VERTICAL CLEARANCE BETWEEN STORM SEWER AND SANITARY SEWER PIPES. 18" MINIMUM VERTICAL CLEARANCE BETWEEN SANITARY SEWER AND WATER MAIN.
9. MAINTAIN A MINIMUM OF 10' HORIZONTAL SEPARATION BETWEEN SANITARY SEWER LINES AND WATER MAINS.
10. WHERE PUBLIC UTILITY FIXTURES ARE SHOWN AS EXISTING ON THE PLANS OR ENCOUNTERED WITHIN THE CONSTRUCTION AREA, IT SHALL BE THE RESPONSIBILITY OF THE CONTRACTOR TO NOTIFY THE OWNERS OF THOSE UTILITIES PRIOR TO THE BEGINNING OF ANY CONSTRUCTION. THE CONTRACTOR SHALL AFFORD ACCESS TO THESE FACILITIES FOR NECESSARY MODIFICATION OF SERVICES. UNDERGROUND FACILITIES, STRUCTURES AND UTILITIES HAVE BEEN PLOTTED FROM AVAILABLE SURVEYS AND RECORDS, AND THEREFORE, THEIR LOCATIONS MUST BE CONSIDERED APPROXIMATE ONLY. IT IS POSSIBLE THERE MAY BE OTHERS. THE EXISTENCE OF WHICH IS PRESENTLY NOT KNOWN OR SHOWN. IT IS THE CONTRACTORS RESPONSIBILITY TO DETERMINE THEIR EXISTENCE AND EXACT LOCATIONS AND TO AVOID DAMAGE THERETO. NO CLAIMS FOR ADDITIONAL COMPENSATION WILL BE ALLOWED TO THE CONTRACTOR FOR ANY INTERFERENCE OR DELAY CAUSED BY SUCH WORK. THE CONTRACTOR IS REQUIRED TO UTILIZE THE UTILITY ONE-CALL SERVICE AT 800-292-8989 AT LEAST 48 HOURS PRIOR TO EXCAVATING ANYWHERE ON THE PROJECT.
11. ALL WATERMAIN WORK, PUBLIC OR PRIVATE SHALL BE DONE IN ACCORDANCE WITH THE 2022 EDITION OF THE SUDAS STANDARD SPECIFICATIONS AND ALL CITY SUPPLEMENTALS.
12. THE GENERAL CONTRACTOR SHALL BE RESPONSIBLE FOR COORDINATION OF WORK OF ALL SUBCONTRACTOR(S) INVOLVED IN THE PROJECT.
13. PRIVATE UTILITIES TO BE INSTALLED PER THE CITY'S STANDARD CONSTRUCTION SPECIFICATIONS FOR PUBLIC IMPROVEMENTS AND THE 2012 UNIFORM PLUMBING CODE. CONTACT BUILDING INSPECTION A MINIMUM OF 24 HOURS IN ADVANCE FOR UTILITY INSTALLATION INSPECTIONS.
14. OWNER IS RESPONSIBLE FOR MAINTENANCE OF PRIVATE RETENTION FACILITIES AND PRIVATE UTILITIES.
15. CONTRACTOR SHALL PREVENT ENTRY OF MUD, DIRT, DEBRIS AND OTHER MATERIAL INTO NEW AND EXISTING SEWER SYSTEMS. SHOULD ANY CONTAMINATION OCCUR DURING CONSTRUCTION, THE CONTRACTOR SHALL CLEAN AT NO COST TO THE OWNER. INSTALL SILT FENCE AT ALL PERMANENT STORM SEWER INLETS.

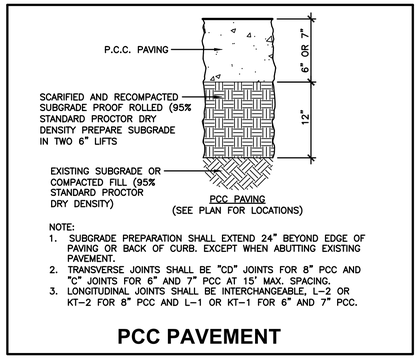

PCC PAVEMENT

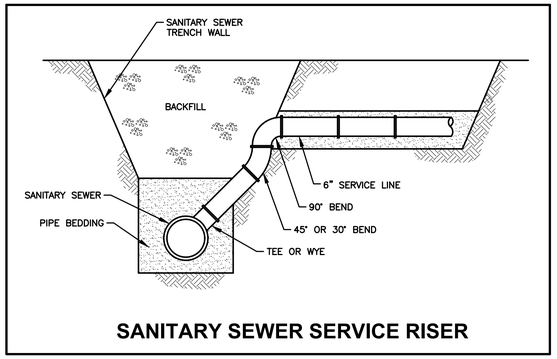

SANITARY SEWER SERVICE RISER

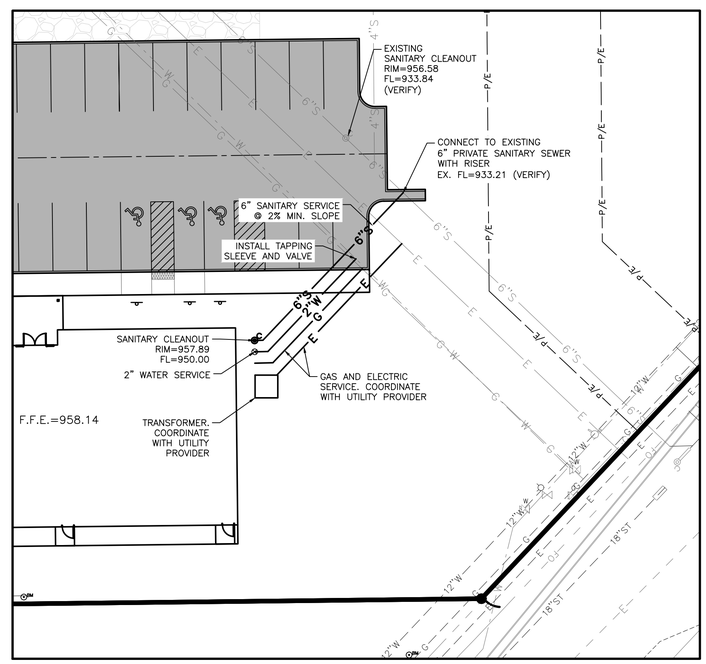

UTILITY PLAN

N

SCALE
0' 10 20' 40'

REVISIONS	DATE
THIRD SUBMITTAL	09/16/22
SECOND SUBMITTAL	08/29/22
FIRST SUBMITTAL	08/12/22

3405 S.E. CROSSROADS DRIVE, SUITE G
GRIMES, IOWA 50111
PHONE: (515) 369-4400 FAX: (515) 369-4410
ENGINEER: EKO
EI: GH
CIVIL DESIGN ADVANTAGE

MIDSTATES PRECAST PRODUCTS - PHASE 2
GRADING & UTILITY PLAN
BONDURANT, IOWA

3/3
2111.891

FILE: H:\2021\211891\DWG\211891-SITE.DWG
REF(S): XREF(S) ATTACHED
PLOTTED BY: RYAN LUNDHOLM
PLOTTED: 9/16/2022 2:05 PM
COMMENT:
ENG:
TECH:

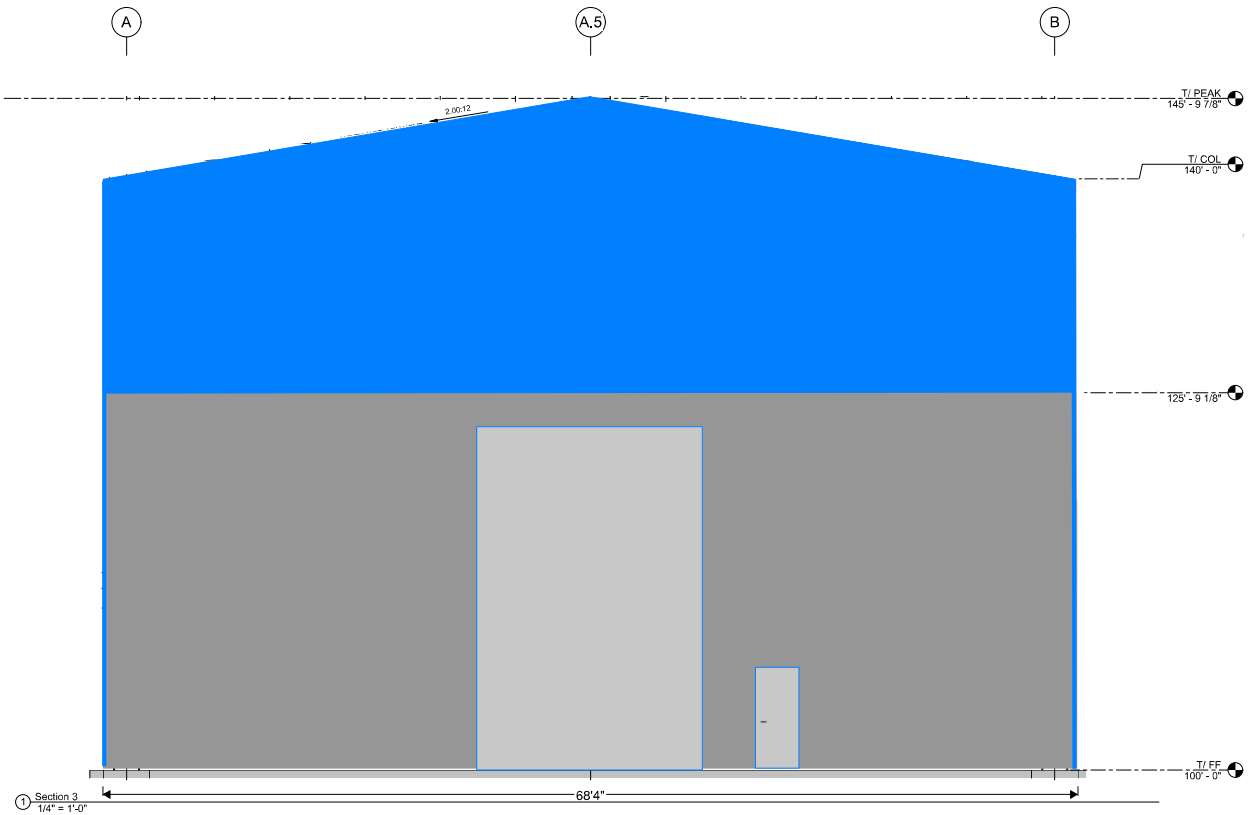

South Elevation

RAKER RHODES Industrial
Des Moines, Iowa
www.rakerrhodes.com

This drawing has been prepared by the Engineer, or under the Engineer's direct supervision. This drawing is provided as an instrument of service by the Engineer. It is not to be used or intended for reliance on this project only. Any reproduction, use, or circulation of the information contained herein without the prior written consent of the Engineer is prohibited by law. (C) Copyright 2008 by Raker Rhodes Engineering, L.C.C.

SIDELINE STEEL
MIDSTATES PRECAST CRANE BLDG
BONDURANT, IA

No.	Description	Date
0	ISSUED FOR CONSTRUCTION	12/23/2021

Job No. RRI21 193
Proj. Mgr. VWW

Sheet Title
Elevations

Sheet No.
A1.1

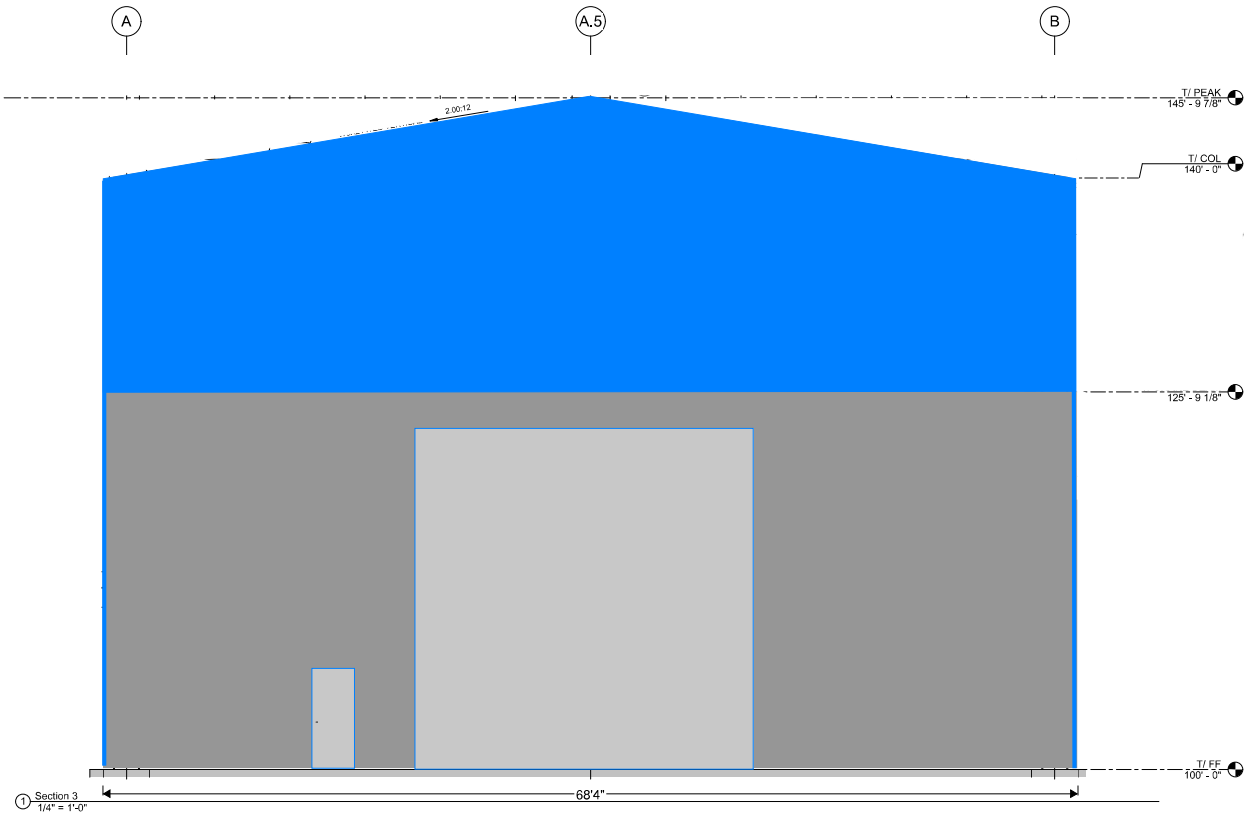

North Elevation

RAKER RHODES Industrial
Des Moines, Iowa
www.rakerrhodes.com

This drawing has been prepared by the Engineer, or under the Engineer's direct supervision, and is the property of the Engineer. This drawing is provided as an instrument of service by the Engineer. It is not to be used or intended for use on this project only. Any reproduction, use, or disclosure of information contained herein without the prior written consent of the Engineer is prohibited and violated. (C) Copyright 2006 by Raker Rhodes Engineering, L.C.C.

SIDELINE STEEL
MIDSTATES PRECAST CRANE BLDG
BONDURANT, IA

No.	Description	Date
0	ISSUED FOR CONSTRUCTION	12/23/2021

Job No. RRI21193
Proj. Mgr. VWW

Sheet Title
Elevations

Sheet No.
A1.2

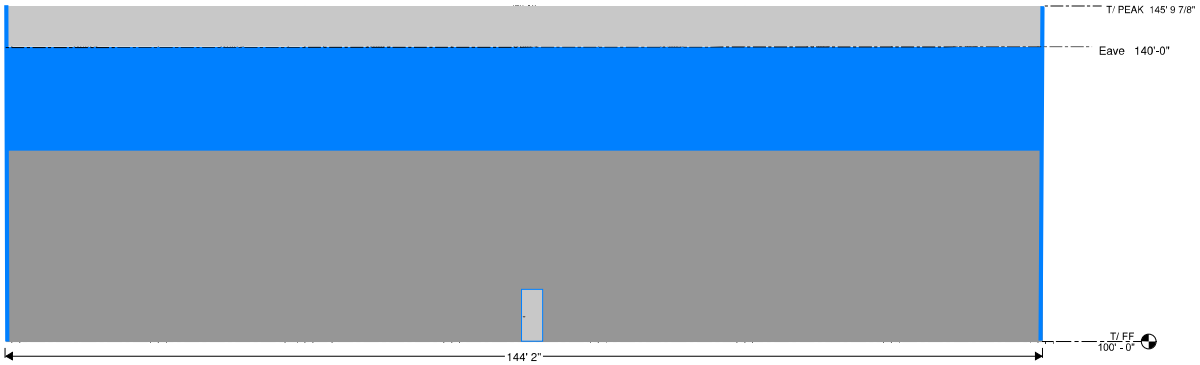

1 GRID LINE A East Elevation
1/8" = 1'-0"

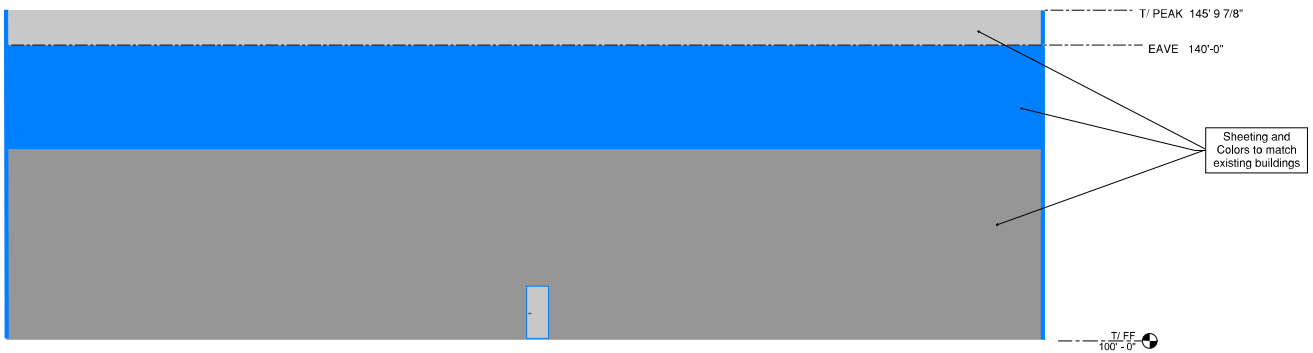

2 GRID LINE B West Elevation
1/8" = 1'-0"

RAKER RHODES Industrial
Des Moines, Iowa
www.rakerrhodes.com

This drawing has been prepared by the Engineer, or under the Engineer's direct supervision. This drawing is provided as an instrument of service by the Engineer. It is not to be used, or intended for use, on this project only. Any reproduction, use, or circulation of drawings contained herein without the prior written consent of the Engineer is prohibited by law. (C) Copyright 2008 by Raker Rhodes Engineering, L.C.C.

SIDELINE STEEL
MIDSTATES PRECAST CRANE BLDG
BONDURANT, IA

No.	Description	Date
B	ADDED STEEL FOR APPROVAL	10/19/2021
0	ISSUED FOR CONSTRUCTION	12/23/2021

Job No. RRI21 193
Proj. Mgr. VWW

Sheet Title
Elevations

Sheet No.
A1.3

SP SPECIAL INSPECTION
SP1 SPECIAL INSPECTION PROGRAM SHALL CONFORM TO CHAPTER 17 OF THE IBC.

SP2 THE OWNER SHALL EMPLOY A SPECIAL INSPECTOR TO PERFORM THE REQUIRED TESTS AND SPECIAL INSPECTIONS WITH QUALIFICATIONS DESCRIBED PER IBC CHAPTER 17 AND THE PROJECT SPECIFICATIONS.

SP3 SPECIAL INSPECTION REPORTS SHALL BE FURNISHED TO BUILDING OFFICIAL, OWNER, ARCHITECT, STRUCTURAL ENGINEER, AND CONTRACTOR.

SP4 SPECIAL INSPECTOR SHALL SUBMIT A FINAL REPORT STATING THAT THE STRUCTURAL WORK WAS, TO THE BEST OF THE SPECIAL INSPECTOR'S KNOWLEDGE, PERFORMED IN ACCORDANCE WITH THE CONSTRUCTION DOCUMENTS.

SP5 SPECIAL INSPECTION PROGRAM:

VERIFICATION AND INSPECTION	FREQUENCY / TASK
STEEL & DECKING - CONFORM TO AISC 360 REQUIREMENTS	
1. INSPECTION TASKS PRIOR TO WELDING:	
A. WELDING PROCEDURE SPECIFICATIONS (WPS) AVAILABLE.	PERFORM
B. MANUFACTURER'S CERTIFICATIONS FOR WELDING CONSUMABLES AVAILABLE.	PERFORM
C. MATERIAL IDENTIFICATION (TYPE/GRADE).	OBSERVE
D. WELDER IDENTIFICATION SYSTEM.	OBSERVE
E. FIT-UP OF GROOVE WELDS (INCLUDING JOINT GEOMETRY): • JOINT PREPARATION • DIMS. (ALIGNMENT, ROOT OPENING, ROOT FACE, BEVEL) • CLEANLINESS (CONDITION OF STEEL SURFACES) • TACKING (TACK WELD QUALITY & LOCATION) • BACKING TYPE & FIT (IF APPLICABLE)	OBSERVE
F. CONFIGURATION & FINISH OF ACCESS HOLES.	OBSERVE
G. FIT-UP OF FILLET WELDS: • DIMS. (ALIGNMENT, GAPS AT ROOT) • CLEANLINESS (CONDITION OF STEEL SURFACES) • TACKING (TACK WELD QUALITY & LOCATION)	OBSERVE
2. INSPECTION TASKS DURING WELDING:	
A. STRUCTURAL STEEL & COLD-FORMED STEEL DECK:	
1) COMPLETE & PARTIAL PENETRATION GROOVE WELDS.	PERFORM
2) MULTIPASS FILLET WELDS.	PERFORM
3) SINGLE-PASS FILLET WELDS > 5/16".	PERFORM
4) PLUG & SLOT WELDS.	PERFORM
5) SINGLE-PASS FILLET WELDS ≤ 5/16".	OBSERVE
6) FLOOR & ROOF DECK WELDS.	OBSERVE
B. USE OF QUALIFIED WELDERS.	OBSERVE
C. CONTROL & HANDLING OF WELDING CONSUMABLES: • EXPOSURE CONTROL • PACKAGING	OBSERVE
D. NO WELDING OVER CRACKED TACK WELDS.	OBSERVE
E. ENVIRONMENTAL CONDITIONS: • WIND SPEED WITHIN LIMITS • PRECIPITATION & TEMP.	OBSERVE
F. WPS FOLLOWED: • SETTINGS ON WELDING EQPT. • TRAVEL SPEED • SELECTED WELDING MATERIALS • PREHEAT APPLIED • SHIELDING GAS TYPE/FLOW RATE • PROPER POSITION (F, V, H, OH) • INTERPASS TEMP. MAINTAINED (MIN / MAX)	OBSERVE
G. WELDING TECHNIQUES: • INTERPASS & FINAL CLEANING • EACH PASS WITHIN PROFILE LIMITATIONS • EACH PASS MEETS QUALITY REQUIREMENTS	OBSERVE
3. INSPECTION TASKS AFTER WELDING.	
A. WELDS CLEANED.	OBSERVE
B. SIZE, LENGTH, & LOCATION OF WELDS.	PERFORM
C. WELDS MEET VISUAL ACCEPTANCE CRITERIA: • CRACK PROHIBITION • WELD SIZE • WELD / BASE-METAL FUSION • UNDERCUT • CRATER CROSS SECTION • POROSITY • WELD PROFILES	PERFORM
D. ULTRASONIC TESTING TO BE PERFORMED ON COMPLETE JOINT PENETRATION WELDS PER AWS D1.1-2010.	PERFORM
E. ARC STRIKES.	PERFORM
F. k-AREA.	PERFORM
G. BACKING & WELD TABS REMOVED (IF REQ'D.).	PERFORM
H. REPAIR ACTIVITIES.	PERFORM
I. DOCUMENT ACCEPTANCE OR REJECTION OF WELDED JOINT OR MEMBER.	PERFORM
4. INSPECTION TASKS PRIOR TO BOLTING:	
A. MFR. CERTS. AVAILABLE FOR FASTENER MATERIALS.	PERFORM
B. FASTENERS MARKED IN ACCORDANCE w/ ASTM RQMTS.	OBSERVE
C. PROPER FASTENERS SELECTED FOR THE JOINT DETAIL (GRADE, TYPE, BOLT LENGTH, EXCLUDED THREADS).	OBSERVE
D. PROPER BOLTING PROCEDURE SELECTED FOR JOINT DETAIL.	OBSERVE
E. CONNECTING ELEMENTS, INCLUDING THE APPROPRIATE FAYING SURFACE CONDITION & HOLE PREPARATION, IF SPECIFIED, MEET APPLICABLE RQMTS.	OBSERVE
F. PRE-INSTALLATION VERIFICATION TESTING BY INSTALLATION PERSONNEL OBSERVED & DOCUMENTED FOR FASTENER ASSEMBLIES & METHODS USED.	OBSERVE
G. PROPER STORAGE PROVIDED FOR BOLTS, NUTS, WASHERS & OTHER FASTENER COMPONENTS.	OBSERVE
5. INSPECTION TASKS DURING BOLTING:	
A. FASTENER ASSEMBLIES, OF SUITABLE CONDITION, PLACED IN ALL HOLES & WASHERS (IF REQ'D) ARE POSITIONED AS REQ'D.	OBSERVE
B. JOINT BROUGHT TO THE SNUG-TIGHT CONDITION PRIOR TO THE PRETENSIONING OPERATION.	OBSERVE
C. FASTENER COMPONENT NOT TURNED BY THE WRENCH PREVENTED FROM ROTATING.	OBSERVE
D. FASTENERS ARE PRETENSIONED IN ACCORDANCE w/ THE RCSC SPECIFICATION, PROGRESSING SYSTEMATICALLY FROM THE MOST RIGID POINT TOWARD THE FREE EDGES.	OBSERVE
6. INSPECTION TASKS AFTER BOLTING:	OBSERVE
A. DOCUMENT ACCEPTANCE OR REJECTION OF BOLTED CONNS.	PERFORM
CONCRETE	
1. INSPECT REINFORCEMENT, INCLUDING PRESTRESSING TENDONS, & VERIFY PLACEMENT.	PERIODIC
2. INSPECT ANCHORS CAST IN CONCRETE.	PERIODIC
3. INSPECT ANCHORS POST-INSTALLED IN HARDENED CONCRETE MEMBERS:	
A. ADHESIVE ANCHORS INSTALLED IN HORIZONTALLY OR UPWARDLY INCLINED ORIENTATIONS TO RESIST SUSTAINED TENSION LOADS.	CONT.
B. MECHANICAL ANCHORS AND ADHESIVE ANCHORS NOT DEFINED IN 4.A.	PERIODIC
4. VERIFY USE OF REQUIRED DESIGN MIX.	PERIODIC
5. PRIOR TO CONCRETE PLACEMENT, FABRICATE SPECIMENS FOR STRENGTH TESTS, PERFORM SLUMP & AIR CONTENT TESTS AND DETERMINE CONCRETE TEMPERATURE.	CONT.
6. INSPECT CONCRETE PLACEMENT FOR PROPER APPLICATION TECHNIQUES.	CONT.
7. VERIFY MAINTENANCE OF SPECIFIED CURING TEMPERATURE & TECHNIQUES.	PERIODIC
8. VERIFY OF IN-SITU CONCRETE STRENGTH, PRIOR TO STRESSING OF TENDONS IN POST TENSIONED CONCRETE & PRIOR TO REMOVAL OF SHORES & FORMS FROM BEAMS & STRUCTURAL SLABS.	PERIODIC
9. INSPECT FORMWORK FOR SHAPE, LOCATION & DIMENSIONS OF THE CONCRETE MEMBER BEING FORMED.	PERIODIC
SOILS	
1. VERIFY MATERIALS BELOW SHALLOW FOUNDATIONS ARE ADEQUATE TO ACHIEVE THE DESIGN BEARING CAPACITY.	PERIODIC
2. VERIFY EXCAVATIONS ARE EXTENDED TO PROPER DEPTH & HAVE REACHED PROPER MATERIAL.	PERIODIC
3. PERFORM CLASSIFICATION & TESTING OF COMPACTED FILL MATERIALS.	PERIODIC
4. VERIFY USE OF PROPER MATERIALS, DENSITIES & LIFT THICKNESSES DURING PLACEMENT & COMPACTION OF COMPACTED FILL.	CONT.
5. PRIOR TO PLACEMENT OF COMPACTED FILL, OBSERVE SUBGRADE & VERIFY THAT SITE HAS BEEN PREPARED PROPERLY.	PERIODIC

PROGRAM FOOTNOTES
1. THE ITEMS INDICATED ABOVE SHALL BE INSPECTED IN ACCORDANCE WITH CHAPTER 17 OF THE IBC BY A CERTIFIED SPECIAL INSPECTOR FROM AN ESTABLISHED TESTING AGENCY. FOR MATERIAL SAMPLING AND TESTING REQUIREMENTS, REFER TO THE PROJECT SPECIFICATIONS & THE SPECIFIC STRUCTURAL NOTES SECTIONS. THE TESTING AGENCY SHALL SEND COPIES OF ALL STRUCTURAL TESTING & INSPECTION REPORTS DIRECTLY TO THE ARCHITECT, STRUCTURAL ENGINEER, CONTRACTOR, & BUILDING OFFICIAL. ANY MATERIALS WHICH FAIL TO MEET THE PROJECT SPECIFICATIONS SHALL IMMEDIATELY BE BROUGHT TO THE ATTENTION OF THE ARCHITECT. SPECIAL INSPECTION TESTING REQUIREMENTS APPLY EQUALLY TO ALL BIDDER DESIGNED COMPONENTS.
2. **CONT.** - CONTINUOUS SPECIAL INSPECTION. SPECIAL INSPECTOR IS PRESENT WHEN & WHERE THE WORK TO BE INSPECTED IS BEING PERFORMED. (IBC SECTION 1702).
3. **PERIODIC** - PERIODIC SPECIAL INSPECTION. SPECIAL INSPECTOR IS INTERMITTENTLY PRESENT WHERE THE WORK TO BE INSPECTED HAS BEEN OR IS BEING PERFORMED.
4. **OBSERVE** - SPECIAL INSPECTOR SHALL OBSERVE THESE ITEMS ON A RANDOM BASIS. OPERATIONS NEED NOT BE DELAYED PENDING THESE INSPECTIONS (AISC 360 SECTION N5).
5. **PERFORM** - SPECIAL INSPECTOR SHALL PERFORM THESE TASKS FOR EACH JOINT, CONNECTION, ELEMENT OR MEMBER (AISC 360 SECTION N5).
6. SPECIAL INSPECTION IS NOT REQUIRED FOR WORK PERFORMED BY AN APPROVED FABRICATOR (IBC SECTION 1704.2.2).
7. ALL WELDS SHALL BE VISUALLY INSPECTED.
8. CJP WELDS SHALL BE TESTED ULTRASONICALLY OR BY SIMILAR APPROVED METHOD.
9. INSPECTION FOR PREFABRICATED CONSTRUCTION SHALL BE THE SAME AS IF THE MATERIAL USED IN THE CONSTRUCTION TOOK PLACE ON SITE. CONTINUOUS INSPECTION WILL NOT BE REQUIRED DURING PREFABRICATION IF THE APPROVED AGENCY CERTIFIES THE CONSTRUCTION AND FURNISHES EVIDENCE OF COMPLIANCE.

GP GENERAL PARAMETERS
GP1 STRUCTURAL DRAWINGS ARE A PORTION OF THE CONTRACT DOCUMENTS AND ARE INTENDED TO BE USED WITH ARCHITECTURAL, MECHANICAL, AND ELECTRICAL DRAWINGS. THE CONTRACTOR IS RESPONSIBLE FOR COORDINATING THE REQUIREMENTS FROM THESE DRAWINGS INTO THEIR SHOP DRAWINGS AND WORK.

GP2 VERIFY ALL DIMENSIONS IN THE FIELD PRIOR TO FABRICATION OF ANY ITEMS.

GP3 DRAWINGS SHALL BE COORDINATED WITH ARCHITECTURAL, MECHANICAL, ELECTRICAL, AND PLUMBING DRAWINGS FOR ADDITIONAL OPENINGS, ELECTRICAL COMPONENTS, FLOOR DEPRESSIONS, ETC. NOT SHOWN ON DRAWINGS. COORDINATE LOCATION, SIZE AND REINFORCEMENT OF ALL OPENINGS WITH RESPECTIVE TRADES BEFORE FABRICATION. REPORT ANY DISCREPANCIES AND/OR INTERFERENCE PROBLEMS TO THE ARCHITECT AND STRUCTURAL ENGINEER OF RECORD.

GP4 THESE GENERAL NOTES SUPPLEMENT THE PROJECT SPECIFICATIONS. REFER TO THE PROJECT SPECIFICATIONS FOR ADDITIONAL REQUIREMENTS. NOTES AND DETAILS ON THE STRUCTURAL DRAWINGS SHALL TAKE PRECEDENCE OVER THE GENERAL NOTES AND TYPICAL DETAILS. WHERE NO DETAILS ARE PROVIDED, CONSTRUCTION SHALL BE AS SHOWN FOR SIMILAR WORK.

GP5 THE BUILDING IS NOT STRUCTURALLY STABLE UNTIL ALL CONNECTIONS, FRAMING, SHEAR WALLS, X-BRACING, AND EXTERIOR WALLS ARE COMPLETE AND HAVE ACHIEVED FINAL DESIGN STRENGTH. CONTRACTOR IS SOLELY RESPONSIBLE TO MAINTAIN STRUCTURAL STABILITY DURING ERECTION AND CONSTRUCTION. TEMPORARY BRACING SYSTEMS ARE NOT TO BE REMOVED UNTIL STRUCTURAL WORK IS COMPLETE.

GP6 CONTRACTOR'S CONSTRUCTION AND/OR ERECTION SEQUENCES SHALL RECOGNIZE AND CONSIDER THE EFFECTS OF THERMAL MOVEMENTS OF STRUCTURAL ELEMENTS DURING THE CONSTRUCTION PERIOD.

GP7 RETAINING WALLS AND BASEMENT WALLS WHICH TIE TO UPPER SLABS SHALL NOT BE BACKFILLED UNTIL THE UPPER SLABS REACH FULL DESIGN STRENGTH, UNLESS ADEQUATE BRACING IS PROVIDED AT THE TOP OF THE WALL.

DP DESIGN PARAMETERS
DP1 THE STRUCTURE IS DESIGNED IN ACCORDANCE WITH THE ICC INTERNATIONAL BUILDING CODE, **2012** EDITION.

DP2 UNIFORM LIVE LOADS:
TYPICAL ROOF (GOVERNED BY SNOW) 20 PSF
DRIFT LOAD AS SHOWN ON PLAN
TYPICAL PLATFORM 40 PSF
TYPICAL EQUIPMENT LEVEL 100 PSF

DP3 CONCENTRATED LIVE LOADS:
TYPICAL OFFICE (OVER 2.5 FT. x 2.5 FT.) 2000 LB
TYPICAL STAIRS (OVER 2 IN. x 2 IN.) 300 LB

DP4 SNOW DESIGN PARAMETERS:
GROUND SNOW LOAD (Pg) 25 PSF
FLAT ROOF SNOW LOAD (Pf) 20 PSF
SNOW EXPOSURE FACTOR (C/E) 1.0
SNOW LOAD IMPORTANCE FACTOR (I) 1.0
SNOW LOAD THERMAL FACTOR (Ct) 1.0

DP5 ATMOSPHERIC ICING DESIGN PARAMETERS:
UNIFORM RADIAL ICE THICKNESS (t) 0.75"
ICE IMPORTANCE FACTOR (Ii) 1.0

DP6 WIND DESIGN PARAMETERS:
BASIC WIND SPEED (V) (3 SECOND GUST) 115 MPH
RISK CATEGORY II
WIND EXPOSURE CATEGORY C
INTERNAL PRESSURE COEFFICIENT +/-.18
BASIC DESIGN PRESSURE @ ROOF 15 PSF (SERVICE)
NET WIND UPLIFT @ ROOF 10 PSF (SERVICE)

DP7 ALLOWABLE WALL DEFLECTIONS:
EXTERIOR (CLADDING DESIGN) L/360
(BRICK VENEER DESIGN) L/600 ≤ 0.3"
INTERIOR L/360

DP8 ALLOWABLE FRAMING DEFLECTIONS:
ROOF LIVE LOAD L/360
ROOF TOTAL LOAD L/240
FLOOR LIVE LOAD L/360
FLOOR TOTAL LOAD L/240

DP9 ASSUMED FUTURE CONSTRUCTION:
VERTICAL NONE
HORIZONTAL NONE

FP FOUNDATION PARAMETERS
FP1 SIZE AND BOTTOM ELEVATIONS OF FOOTINGS HAVE BEEN ESTABLISHED BASED ON THE ASSUMED MINIMUM ALLOWABLE BEARING PRESSURE OF 1500 PSF AS SHOWN IN IBC TABLE 1806.2. AS EXCAVATION PROGRESSES, UNANTICIPATED SOIL CONDITIONS MAY REQUIRE CHANGES. CONTACT STRUCTURAL ENGINEER OF RECORD FOR EVALUATION OF THESE CHANGES.

FP2 ALLOWABLE SOIL BEARING PRESSURE
CONTINUOUS FOOTINGS 1500 PSF
FP3 FOOTING TO BE AT MINIMUM DEPTH OF LOCAL FROST DEPTH FOR FROST PROTECTION OR FROST-FREE GRANULAR FILL TO BE PLACED BELOW BELOW FOOTING TO LOCAL FROST DEPTH
LOCAL FROST (BELOW FINISHED GRADE) 42 IN.

FP4 DESIGN EARTH PRESSURES:
ACTIVE ..... 35 PCF
PASSIVE ..... 260 PCF
AT REST ..... 60 PCF

FP5 GEOTECHNICAL ENGINEER IS SOLE JUDGE OF THE SUITABILITY OF UNDERLYING MATERIAL TO SUPPORT FOUNDATIONS. BEARING MATERIAL SHALL BE APPROVED BY GEOTECHNICAL ENGINEER BEFORE FOUNDATION INSTALLATION. DO NOT PROCEED WITHOUT APPROVAL.

CN CONCRETE NOTES
CN1 CONCRETE WORK SHALL CONFORM TO CHAPTER 19 OF THE IBC.

CN2 WHERE NEW CONCRETE IS PLACED AGAINST EXISTING CONCRETE, THE EXISTING CONCRETE SURFACE SHALL BE CLEANED AND ROUGHENED TO A MINIMUM OF 1/4" AMPLITUDE.

CN3 ALL EXPOSED EDGES OF CONCRETE MEMBERS SHALL BE CHAMFERED 3/4" U.N.O.

CN4 CONCRETE FORMWORK:
CN4.1 SLEEVES, OPENINGS, CONDUIT, AND OTHER EMBEDDED ITEMS NOT SHOWN ON THE STRUCTURAL DRAWINGS SHALL BE APPROVED BY THE STRUCTURAL ENGINEER PRIOR TO POURING CONCRETE. CONDUITS EMBEDDED IN SLABS SHALL NOT BE LARGER IN OUTSIDE DIMENSION THAN ONE THIRD OF THE THICKNESS OF THE SLAB AND SHALL NOT BE SPACED CLOSER THAN THREE DIAMETERS ON CENTER.
CN4.2 VERIFY ALL BLOCK OUTS WITH ARCHITECTURAL, MECHANICAL, ELECTRICAL, AND PLUMBING REQUIREMENTS PRIOR TO POURING.

CN5 CONCRETE REINFORCEMENT:
CN5.1 DETAILING, FABRICATION, AND PLACEMENT OR REINFORCEMENT SHALL CONFORM TO ACI-315.
CN5.2 ALL REINFORCEMENT TO BE ASTM A615 GRADE 60 U.N.O. WELDED WIRE FABRIC TO BE ASTM A185 WITH WIRE CONFORMING TO ASTM A82. REINFORCING STEEL SHALL BE SECURELY TIED IN PLACE USING #16 ANNEALED IRON WIRE. REINFORCEMENT SHALL BE CONTINUOUS THROUGH ALL CONSTRUCTION JOINTS UNLESS NOTED OTHERWISE.
CN5.3 ALL CONTINUOUS REINFORCING SHALL BE SPLICED USING CLASS B TENSION SPLICES, U.N.O.
CN5.4 BARS IN BEAMS AND SLABS SHALL BE SUPPORTED ON WELL-CURED CONCRETE BLOCKS OR APPROVED METAL CHAIRS, AS SPECIFIED BY THE CRSI MANUAL OF STANDARD PRACTICE, MSP-1.
CN5.5 CONTINUE HORIZONTAL WALL BARS THROUGH PILASTERS, COLUMNS, AND INTERSECTING WALLS. REFER TO TYPICAL DETAILS FOR LAYOUT OF CORNER BARS AND BARS IN SMALL WALL SECTIONS. SLAB BARS SHALL BE HOOKED INTO WALLS OR HOOKED DOWELS SHALL BE PROVIDED TO MATCH SLAB REINFORCING. PROVIDE HOOKED DOWELS FROM FOOTINGS TO MATCH VERTICAL WALL REINFORCING.
CN5.6 ADD TWO DIAGONAL #5 BARS, FOUR FEET LONG, CENTERED, AT EACH CORNER OF FOUNDATION OR SLAB OPENING, U.N.O.
CN5.7 U.N.O., INSTALL WWF 1 1/2" FROM TOP OF ALL SLABS ON GRADE, TOPPING SLABS ON DECK, OR TOPPING SLABS ON PRECAST. LAP JOINTS TWO FULL MESHES BUT NOT LESS THAN 8". AT CONSTRUCTION JOINTS, LOCATE WWF AT MID DEPTH OF SLAB.

CN6 COVERAGE FOR REINFORCEMENT:
CN6.1 CONCRETE CAST AGAINST AND PERMANENTLY EXPOSED TO EARTH ..... 3"
CN6.2 CONCRETE EXPOSED TO EARTH AND WEATHER:
#6 THRU #18 BARS ..... 2"
#5 BAR, W31 OR D31 WIRE AND SMALLER ..... 2"
CN6.3 CONCRETE NOT EXPOSED TO WEATHER OR IN CONTACT WITH GROUND:
SLABS, WALLS, JOISTS:
#14 AND # 18 ..... 2"
#11 BAR AND SMALLER ..... 2"
BEAMS, COLUMNS:
PRIMARY REINFORCEMENT, TIES, STIRRUPS, SPIRALS ..... 2"

CN7 CONCRETE COMPRESSIVE STRENGTHS SHALL BE VERIFIED BY STANDARD 28-DAY CYLINDER TESTS PER ASTM C39 AND SHALL BE AS FOLLOWS:
FOOTINGS..... f'c = 4,000 PSI
GRADE BEAMS/PILECAPS..... f'c = 4,000 PSI
WALLS/PIERS/COLUMNS..... f'c = 4,000 PSI
SLABS ON GRADE ..... f'c = 4,000 PSI
TOPPING SLABS..... f'c = 4,000 PSI

CN8 SPECIAL INSPECTOR SHALL BE NOTIFIED IF ANY WATER IS TO BE ADDED IN FIELD.

CN9 CONCRETE FOUNDATIONS:
CN9.1 ALL FOUNDATION EXCAVATIONS MUST BE REVIEWED AND APPROVED BY THE SOILS ENGINEER PRIOR TO PLACEMENT OF CONCRETE
CN9.2 ACCURATELY SET AND SECURELY SUPPORT REINFORCING, DOWELS, AND ANCHOR BOLTS PRIOR TO PLACEMENT OF CONCRETE. WET-STICKING OR FLOATING OF REINFORCING,DOWELS, AND ANCHOR RODS IS NOT ALLOWED.
CN9.3 PROVIDE CONSTRUCTION JOINTS, INSERTS, SLEEVES, DOWELS, ANCHORS, ETC., AS SHOWN. ITEMS SHALL BE INSTALLED PER MANUFACTURER'S INSTRUCTIONS AND ACCORDING TO USUAL ACCEPTED STANDARDS OF THE TRADE. ANCHOR RODS PER ASTM F1554 AS SHOWN.
CN9.4 ALL FOUNDATION COLD JOINTS SHALL BE KEYED. CONTINUOUS REINFORCING SHALL EXTEND ONE DEVELOPMENT LENGTH PLUS 6". LOCATE FOUNDATION COLD JOINTS AT EXPANSION JOINTS IN MASONRY VENEER WHEN POSSIBLE.
CN9.5 REINFORCING SHOWN ON DETAILS IS THE REQUIRED MINIMUM. AT CONTRACTOR'S OPTION AND EXPENSE, ADDITIONAL REINFORCING MAY BE PERMITTED TO ASSIST IN EASE OF CONSTRUCTABILITY. ADDITIONAL REINFORCING MUST BE SUBMITTED FOR REVIEW ON SHOP DRAWINGS.

CN10 PROVIDE CONTROL JOINTS AS FOLLOWS, U.N.O.:
CN10.1 SLABS (ON GRID LINE WHERE PRACTICAL) AND:
SLAB-ON-GRADE ..... 10' ± 2'
PRECAST TOPPING SLABS ..... 10' ± 2'
CN10.2 EXPOSED FOUNDATION WALL:
RETAINING WALLS ..... 15' ± 5'
BASEMENT WALLS ..... 50' ± 5'
CN10.3 CONTROL JOINT LAYOUT SHOULD MAINTAIN AN APPROXIMATE ASPECT RATIO OF 1:1.

CN11 EXPOSED SLAB ON GRADE:
CN11.1 ALL SLAB ON GRADE CONTROL JOINTS & COLD JOINTS SHALL BE COORDINATED WITH THE ARCHITECT WHERE THE SLAB IS EXPOSED.
CN11.2 CONTRACTOR SHALL PARTICIPATE IN A PRE-CONSTRUCTION MEETING PRIOR TO ANY EXPOSED CONCRETE SLAB ON GRADE POUR. CONTRACTOR SHALL PROVIDE ENGINEER WITH ANTICIPATED EXPOSED SLAB ON GRADE CONTROL AND COLD JOINT LOCATIONS. ENGINEER MUST APPROVE CONTROL AND COLD JOINT LOCATIONS PRIOR TO ANY EXPOSED CONCRETE SLAB POUR.

CN12 CONCRETE ACCESSORIES:
CN12.1 U.N.O., HEADED SHEAR STUDS TO BE NELSON HEADED ANCHORS WITH FLUXED ENDS OR APPROVED EQUIVALENT AND SHALL BE AUTOMATICALLY END WELDED BY UTILIZING THE MANUFACTURER'S STANDARD EQUIPMENT IN ACCORDANCE WITH THE MANUFACTURER'S RECOMMENDATIONS.
CN12.2 U.N.O., DEFORMED BAR ANCHORS (D.B.A.) SHALL BE NELSON, TYPE D2L, OR APPROVED EQUIVALENT AND SHALL BE AUTOMATICALLY END WELDED BY UTILIZING THE MANUFACTURER'S STANDARD EQUIPMENT IN ACCORDANCE WITH THE MANUFACTURER'S RECOMMENDATIONS.
CN12.3 U.N.O., EXPANSION BOLTS TO BE HILTI KWIK BOLT TZ, SIMPSON STRONG-BOLT, OR APPROVED EQUIVALENT WITH EQUAL ICC TENSION AND SHEAR VALUES. EXPANSION ANCHORS SHALL BE INSTALLED IN STRICT ACCORDANCE WITH MANUFACTURER'S RECOMMENDATIONS. DO NOT CUT REINFORCING IN NEW OR EXISTING CONCRETE DURING INSTALLATION.
CN12.4 U.N.O., EPOXY ANCHORS TO BE HILTI HIT-RE 500-SD, SIMPSON SET-XP, OR APPROVED EQUIVALENT WITH EQUAL ICC TENSION AND SHEAR VALUES. POST-INSTALLED REINFORCING ANCHOR INSTALLATION SHALL BE PERFORMED BY PERSONNEL TRAINED TO INSTALL THE SYSTEM PER THE MANUFACTURER'S PRINTED INSTALLATION INSTRUCTIONS (MPII), AS INCLUDED IN THE ANCHOR PACKAGING. THE CONTRACTOR SHALL ARRANGE FOR A MANUFACTURER'S REPRESENTATIVE TO PROVIDE ONSITE INSTALLATION TRAINING FOR POST-INSTALLED ANCHORS. THE STRUCTURAL ENGINEER OF RECORD MUST RECEIVE DOCUMENTED CONFIRMATION PRIOR TO THE COMMENCEMENT OF INSTALLING THE BARS THAT ALL OF THE CONTRACTOR'S PERSONNEL WHO WILL INSTALL POST-INSTALLED REINFORCING BARS HAVE BEEN TRAINED TO INSTALL THE SYSTEM PER THE MANUFACTURER'S PRINTED INSTALLATION INSTRUCTIONS (MPII).

CN13 EPOXY REPAIR ADHESIVE SHALL CONFORM TO ASTM C881 AND SHALL BE A TWO-COMPONENT, LIQUID EPOXY WITH NON-SAG CONSISTENCY AND A LONG POT LIFE. THE EPOXY ADHESIVE SHALL BE SUITABLE FOR USE IN DRY OR DAMP CONDITIONS. MINIMUM SHEAR STRENGTH SHALL BE 5,000 PSI; MINIMUM TENSILE STRENGTH SHALL BE 4,000 PSI. HOLE SIZES AND INSTALLATION SHALL BE IN STRICT COMPLIANCE WITH THE APPROVED ICC REQUIREMENTS. DO NOT CUT REINFORCING IN NEW OR EXISTING CONCRETE DURING PLACEMENT.

CN14 COLD WEATHER PROTECTION
CN14.1 DURING COLD WEATHER CONSTRUCTION, CONTRACTOR IS RESPONSIBLE FOR PROTECTING CURING CONCRETE PER THE REQUIREMENTS OF ACI 306.
CN14.2 DURING COLD WEATHER CONSTRUCTION, CONTRACTOR IS RESPONSIBLE FOR PROTECTING FOUNDATIONS THAT DO NOT EXTEND TO FROST DEPTH FROM HEAVING. AT CONTRACTOR'S OPTION, BOTTOM OF FOOTINGS MAY BE EXTENDED BEYOND THE FROST ZONE, IN LIEU OF SURFACE PROTECTION METHODS. NO ADD'L REINFORCING WILL BE REQ'D AT EXTENDED FOUNDATIONS. ALL MITIGATION WORK SHALL BE PART OF THE CONTRACTOR BID AND NOT COMPENSIBLE BY CHANGE ORDER.
CN14.3 CONTRACTOR TO PROVIDE A FROST STOOP PER TYP. STOOP DETAIL @ ALL EXTERIOR DOORS, SEE ARCH. FOR DOOR LOCATIONS.

CN15 FINISH
CN15.1 ALL EXPOSED CONCRETE, WALLS AND SLAB ON GRADE SHALL HAVE A LIGHT RUBBED SURFACE OR SMOOTH TROWEL FINISH
CN15.2 ALL SIDEWALKS, EXTERIOR WALKING SURFACES, DRIVEWAYS AND PARKING SURFACES SHALL HAVE A BROOM FINISH

SF STEEL FRAMING NOTES
SF1 STEEL FRAMING WORK SHALL COMPLY WITH CHAPTER 22 OF THE IBC.

SF2 STEEL FRAMING MATERIALS:
SF2.1 W-SECTIONS
ASTM A992 FY=50,000 PSI
SF2.2 TUBULAR STEEL
ASTM A500 GR B FY=46,000 PSI
SF2.3 CHANNELS, ANGLES, BARS, PLATES
ASTM A36 FY=36,000 PSI
SF2.4 PIPES
ASTM A53 GR B FY=35,000 PSI
SF2.5 HEADED ANCHOR SHEAR STUDS
ASTM A108, GR C-1010 THRU C-1020
MIN. TENSILE STRENGTH FY=55,000 PSI
MIN. YIELD STRENGTH FY=55,000 PSI
SF2.6 STEEL JOIST
SJI K-LH SERIES
SF2.7 WELDING ELECTRODES
E70XX

SF3 STEEL ERECTION SHALL COMPLY WITH ALL OSHA, STATE, LOCAL, AND UNION REGULATIONS. IN ADDITION, AT THE END OF THE WORK DAY, ALL COLUMNS MUST BE FRAMED WITH BEAMS AND/OR GIRDERS IN TWO DIRECTIONS, OR ADEQUATELY GUYED OR BRACED IN BOTH DIRECTIONS. TEMPORARY GUYING/BRACING IS THE RESPONSIBILITY OF THE ERECTOR (DESIGN AND INSTALLATION).

SF4 DESIGN, FABRICATION, AND ERECTION SHALL BE IN ACCORDANCE WITH THE AISC STEEL CONSTRUCTION MANUAL, AISC 360-10 INCLUDING COMMENTARY, AND THE AISC 303-10.

SF5 ALL BOLTS FOR STRUCTURAL STEEL CONNECTIONS PER ASTM A325-N U.N.O. AND SHALL CONFORM TO THE RCSC SPECIFICATION. BOLTS FOR STEEL JOISTS MAY BE A307. BOLTS SHALL BE SNUG-TIGHT U.N.O.

SF6 WELDING SHALL CONFORM TO THE AWS CODES FOR ARC AND GAS WELDING IN BUILDING CONSTRUCTION. WELDING SHALL BE PERFORMED IN ACCORDANCE WITH A WELDED PROCEDURE SPECIFICATE (WPS) AS REQUIRED IN AWS D1.1 AND APPROVED BY THE STRUCTURAL ENGINEER. THE WPS VARIABLES SHALL BE WITHIN THE PARAMETERS ESTABLISHED BY THE FILLER-METAL MANUFACTURER.

SF7 WELDS SHALL BE MADE USING E70XX ELECTRODES AND SHALL BE 3/16" MINIMUM, U.N.O. ALL WELDING FOR STRUCTURAL STEEL CONNECTIONS TO BE PERFORMED BY CERTIFIED WELDERS IN ACCORDANCE WITH AWS D1.1.

SF8 FOR COMPLETE JOINT PENETRATION WELDS, WELDS SHALL BE MADE WITH FILLER METAL THAT HAS A MINIMUM CVN TOUGHNESS OF 20 FT-LBS AT 40° F.

SF9 WELDING TO JOIST WEB MEMBERS IS PROHIBITED. WELDING TO JOIST BOTTOM CHORDS IS PROHIBITED WITHOUT THE APPROVAL OF THE ENGINEER, WITH THE SOLE EXCEPTION OF JOIST BRIDGING. WALL PANEL BRACING, GIRDER BRACING, AND ALL OTHER WELDED ATTACHMENTS SHALL BE MADE TO JOIST TOP CHORDS. ATTACHMENTS MADE TO JOIST TOP CHORD SHALL BE MADE ONLY AT JOIST PANEL POINTS.

SF10 ALL STEEL BEAMS, COLUMNS, AND BRACING SHALL REMAIN UNPAINTED.

SF11 PERMANENTLY EXPOSED STEEL SHALL BE HOT-DIP GALVANIZED AFTER FABRICATION, U.N.O.

SF12 CONNECTIONS:
SF12.1 WHERE CONNECTIONS ARE NOT SHOWN, THE CONNECTIONS SHALL BE DESIGNED AND DETAILED IN ACCORDANCE WITH THE REQUIREMENTS OF AISC SPECIFICATIONS FOR THE SHEAR CAPACITIES SHOWN BELOW:

MINIMUM SHEAR CAPACITIES (SERVICE LOADS)			
SHAPE	SHEAR CAPACITY	SHAPE	SHEAR CAPACITY
W8	16 KIPS	W21	59 KIPS
W10	16 KIPS	W24	72 KIPS
W12	28 KIPS	W27	84 KIPS
W14	28 KIPS	W30	94 KIPS
W16	41 KIPS	W33	103 KIPS
W18	53 KIPS	W36	115 KIPS

SF12.2 ANY CONNECTION REACTIONS EXCEEDING THE ABOVE MINIMUM SHEAR CAPACITIES ARE NOTED, IN KIPS, AT EITHER END OF THE MEMBER ON THE STRUCTURAL FRAMING PLANS.
SF12.3 NO CONNECTION SHALL USE LESS THAN 2 ROWS OF BOLTS.
SF12.4 ALL CONNECTIONS SHALL SATISFY THE REQUIREMENTS OF AISC AND OSHA.
SF12.5 MOMENT CONNECTIONS ARE INDICATED ON DRAWINGS BY A DARKENED TRIANGLE ON THE END OF THE MEMBER TO BE MOMENT CONNECTED. IF THE BEAM END MOMENT IS NOT SHOWN, DEVELOP PLASTIC MOMENT CAPACITY OF MEMBER ABOUT MAJOR AXIS. WHERE POSSIBLE, USE SHEAR TAB WEB CONNECTION WITH MOMENT CONNECTION.
SF12.6 U.N.O., POCKET BEAMS 6" MIN. INTO CONC

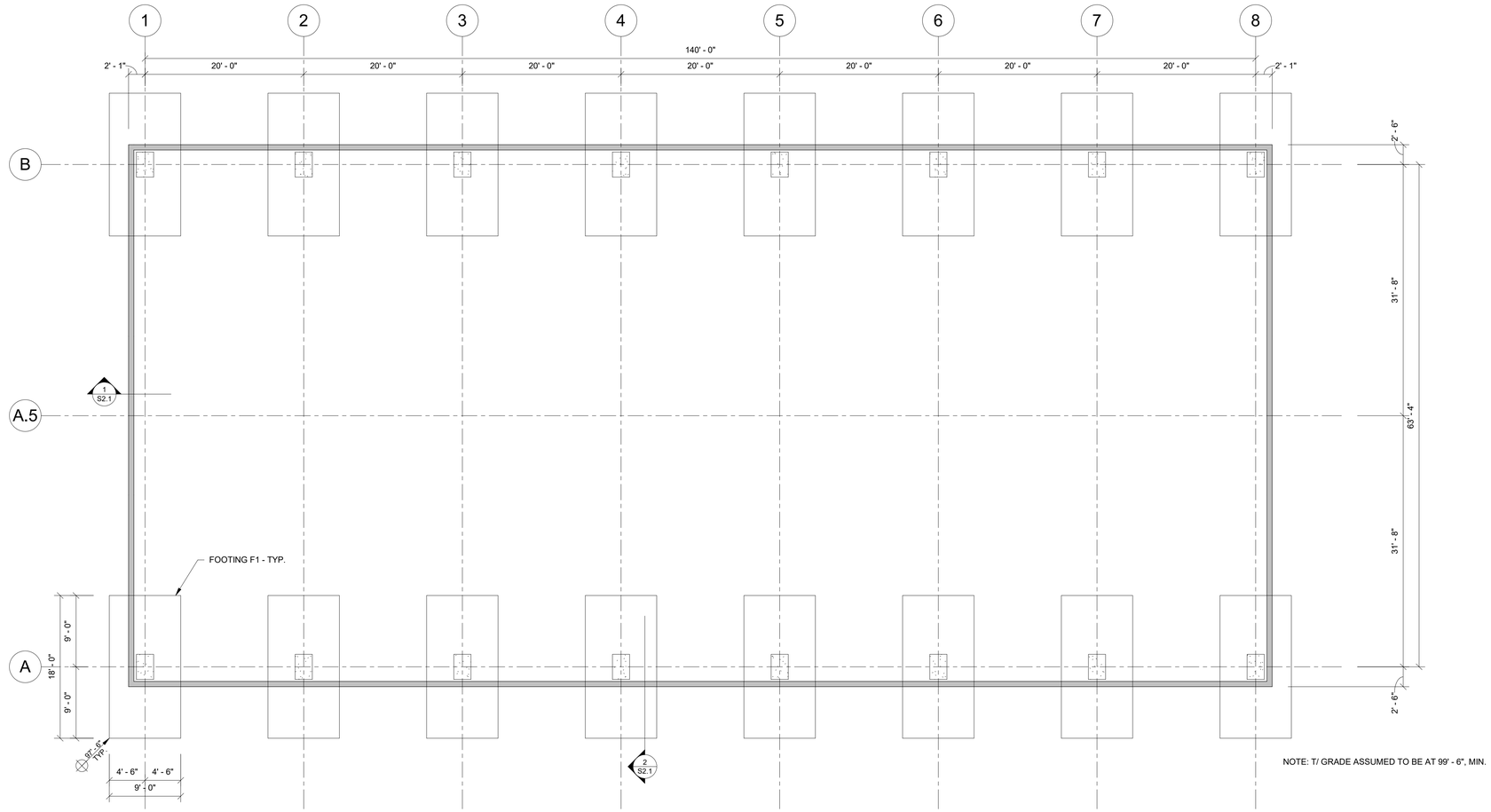

NOTE: T/ GRADE ASSUMED TO BE AT 99' - 6", MIN.

1 FOUNDATION PLAN
1/8" = 1'-0"

FOOTING SCHEDULE			
MARK	DIMENSIONS	REINFORCEMENT	NOTES
F1	18'-0" x 9'-0" x 30"	#6 BARS @ 7" O.C, E.W. TOP & BOTTOM	

FOUNDATION SYMBOL KEY

- T/ WALL/ STEEL
- T/ FOOTING
- T/ JOIST BEARING
- T/ BRICK LEDGE
- ELEV. STEP
- EXIST. BLDG.

LICENSED PROFESSIONAL ENGINEER
KIRK A. MACUMBER
15819
IOWA

RAKER RHODES Industrial
Des Moines, Iowa
www.rakerrhodes.com

This drawing has been prepared by the Engineer, or under the Engineer's direct supervision. This drawing is provided as an instrument of service by the Designer / Engineer and is intended for use on this project only. Any reproduction, use, or disclosure of information contained herein without the prior written consent of the Engineer is strictly prohibited. (C) Copyright 2020, Raker Rhodes Engineering, LLC.

SIDELINE STEEL
MIDSTATES PRECAST CRANE BLDG
BONDURANT, IA

No.	Description	Date
A	FOR APPROVAL	10/07/2021
B	ADDED STEEL FOR APPROVAL	10/19/2021
0	ISSUED FOR CONSTRUCTION	12/23/2021

Job No. RRI21193
Proj. Mgr. VWW

Sheet Title
FOUNDATION PLAN

Sheet No.
S1.1

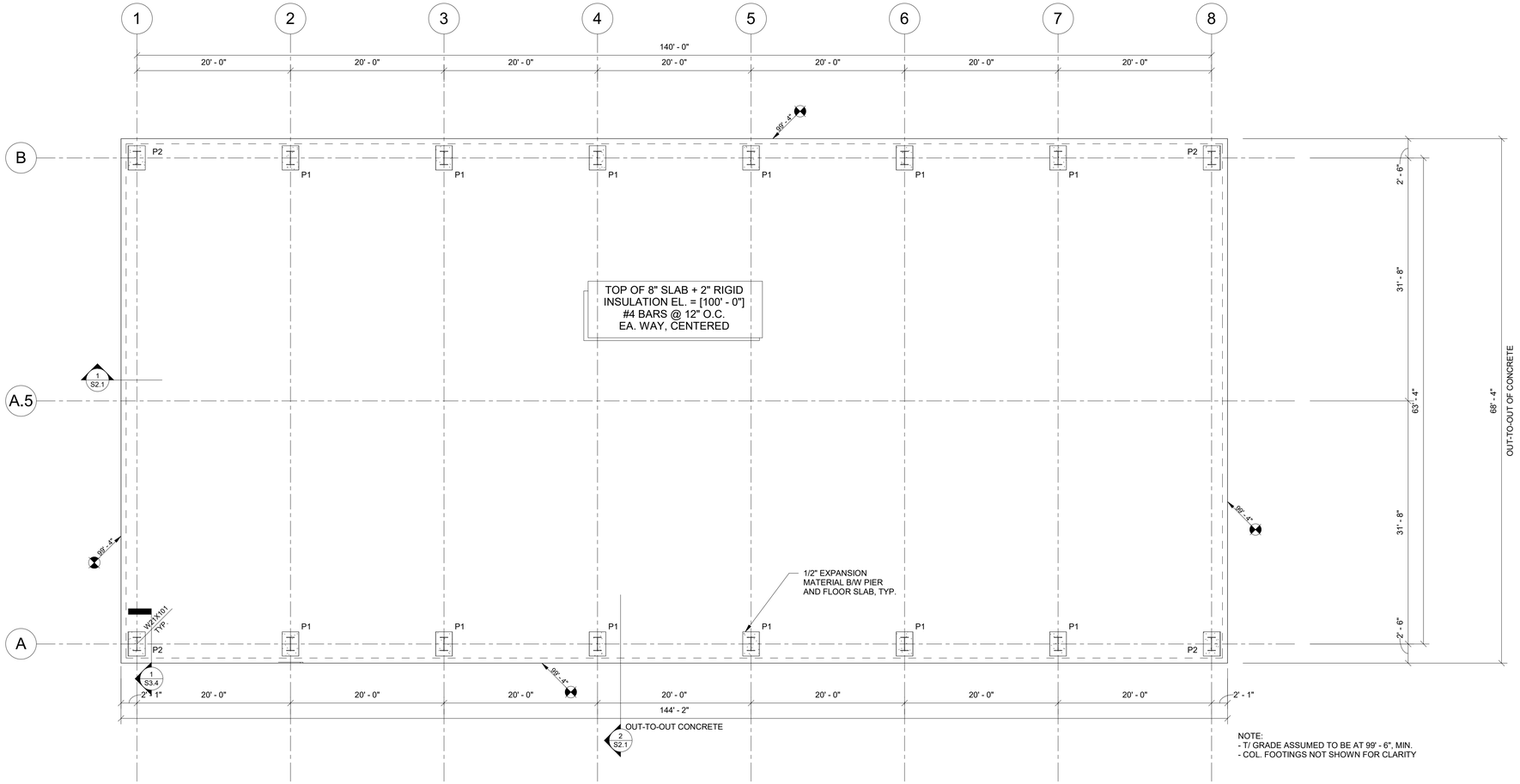

NOTE:
- T/ GRADE ASSUMED TO BE AT 99' - 6", MIN.
- COL. FOOTINGS NOT SHOWN FOR CLARITY

1 FLOOR SLAB
1/8" = 1'-0"

PIER SCHEDULE		
MARK	DETAIL	NOTES
P1	SEE DETAIL 8/ S2.2	T/ PIER = 100' - 0"
P2	SEE DETAIL 9/ S2.2	T/ PIER = 100' - 0"

FOUNDATION SYMBOL KEY

- T/ WALL/ STEEL
- T/ FOOTING
- T/ JOIST BEARING
- T/ BRICK LEDGE
- ELEV. STEP
- EXIST. BLDG.

LICENSED PROFESSIONAL ENGINEER
KIRK A. MACUMBER
15819
IOWA

RAKER RHODES Industrial
Des Moines, Iowa
www.rakerrhodes.com

This drawing has been prepared by the Engineer, or under the Engineer's direct supervision. This drawing is provided as an instrument of service by the Designer / Engineer and is intended for use on this project only. Any reproduction, use, or disclosure of information contained herein without the prior written consent of the Engineer is strictly prohibited. (C) Copyright 2021, Raker Rhodes Engineering, LLC.

SIDELINE STEEL
MIDSTATES PRECAST CRANE BLDG
BONDURANT, IA

No.	Description	Date
A	FOR APPROVAL	10/07/2021
B	ADDED STEEL FOR APPROVAL	10/19/2021
0	ISSUED FOR CONSTRUCTION	12/23/2021

Job No. RRI21193
Proj. Mgr. VWW

Sheet Title
FLOOR PLAN

Sheet No.
S1.2

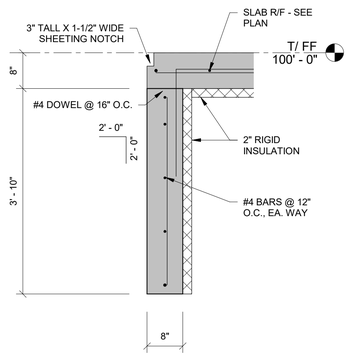

1 TYP. WALL SECTION
3/4" = 1'-0"

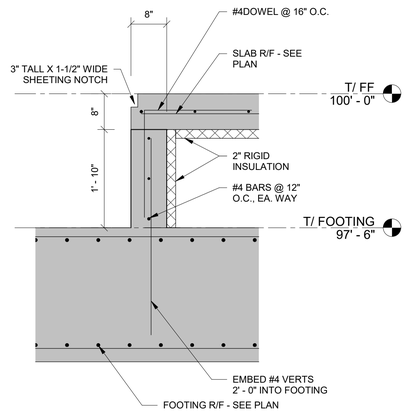

2 WALL AT FOOTING
3/4" = 1'-0"

RAKER RHODES
Industrial
Des Moines, Iowa
www.rakerrhodes.com

This drawing has been prepared by the Engineer, or under the Engineer's direct supervision. This drawing is provided as an instrument of service by the Designer / Engineer and is intended for use on this project only. Any reproduction, use, or disclosure of information contained herein without the prior written consent of the Engineer is strictly prohibited. (C) Copyright 2021, Raker Rhodes Engineering, LLC.

SIDELINE STEEL
MIDSTATES PRECAST CRANE BLDG
BONDURANT, IA

No.	Description	Date
A	FOR APPROVAL	10/07/2021
B	ADDED STEEL FOR APPROVAL	10/19/2021
0	ISSUED FOR CONSTRUCTION	12/23/2021

Job No. RRI21193
Proj. Mgr. VWW

Sheet Title
FOUNDATION SECTIONS

Sheet No.
S2.1

LICENSED PROFESSIONAL ENGINEER
KIRK A. MACUMBER
15819
IOWA

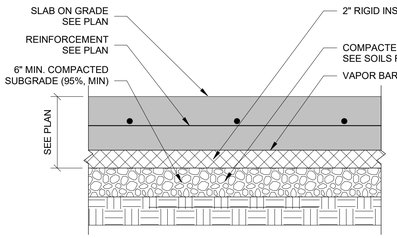

1 SLAB ON GRADE
1 1/2" = 1'-0"

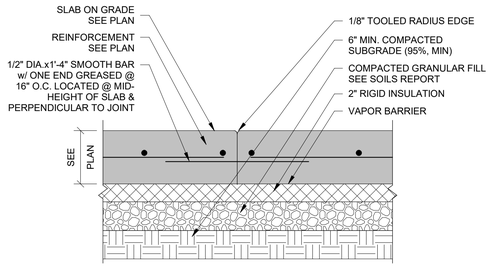

2 SLAB ON GRADE CONSTRUCTION JOINT
1 1/2" = 1'-0"

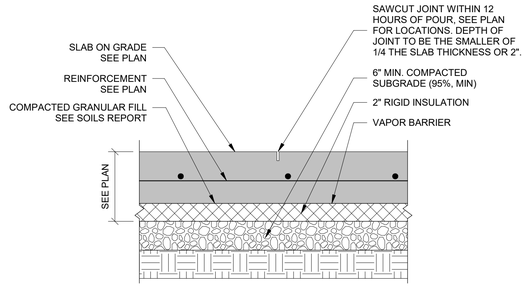

3 SLAB ON GRADE CONTROL JOINT
1 1/2" = 1'-0"

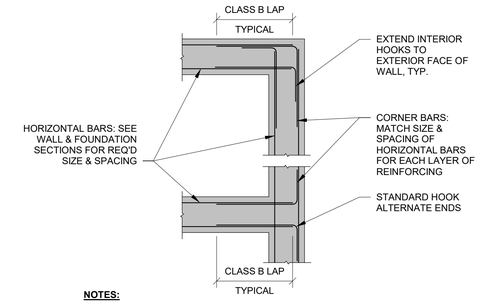

NOTES:
1) PROVIDE REINFORCING AS SHOWN ABOVE @ CORNERS OF FOUNDATION WALLS, GRADE BEAMS, AND TRENCH FOOTINGS.
2) REINFORCING SHOWN ABOVE NOT REQUIRED @ POURED FOOTINGS.
CONTINUE TRANSVERSE FOOTING REINFORCEMENT TO EXTERIOR EDGE AT CORNERS. SEE FOOTING DETAILS.

4 REINFORCING @ CORNERS
1/2" = 1'-0"

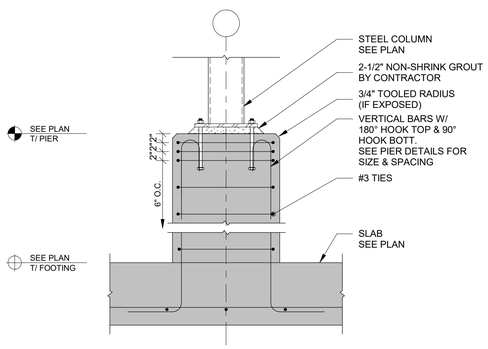

5 CONCRETE PIER
3/4" = 1'-0"

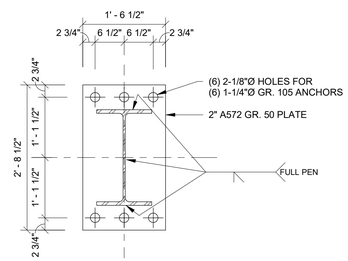

6 MOMENT BASEPLATE
3/4" = 1'-0"

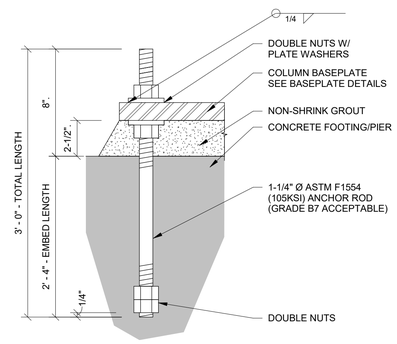

7 ANCHOR ROD SETTING DETAIL
3" = 1'-0"

AISC TABLE 14-2: MIN WASHER DIMENSIONS

ANCHOR DIA.	MIN WASHER SIZE.	MIN WASHER THICKNESS
3/4"	2"	1/4"
7/8"	2 1/2"	5/16"
1"	3"	3/8"
1 1/4"	3 1/2"	1/2"
1 1/2"	4"	1/2"
1 3/4"	4 1/2"	5/8"
2"	5"	3/4"
2 1/2"	5 1/2"	7/8"

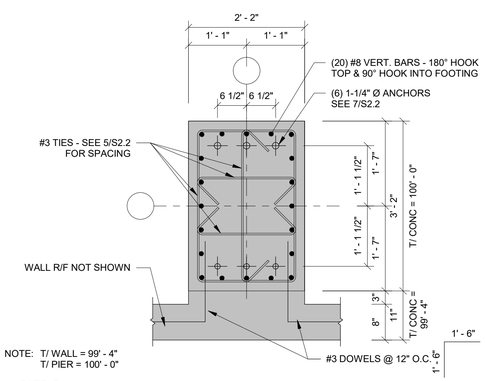

8 PIER P1
3/4" = 1'-0"

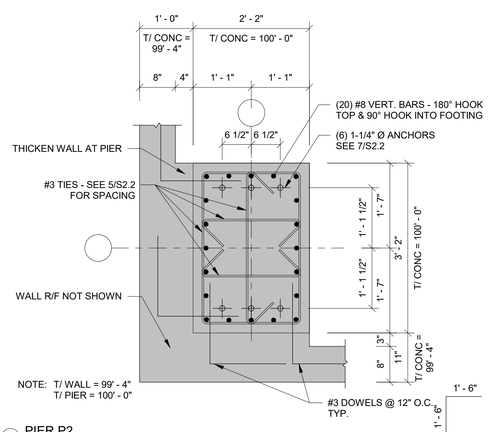

9 PIER P2
3/4" = 1'-0"

RAKER RHODES Industrial
Des Moines, Iowa
www.rakerrhodes.com

This drawing has been prepared by the Engineer, or under the Engineer's direct supervision. This drawing is provided as an instrument of service by the Designer / Engineer and is intended for use on this project only. Any reproduction, use, or disclosure of information or data contained herein without the prior written consent of the Engineer is strictly prohibited. © Copyright 2020, Raker Rhodes Engineering, L.C.C.

SIDELINE STEEL
MIDSTATES PRECAST CRANE BLDG
BONDURANT, IA

No.	Description	Date
A	FOR APPROVAL	10/07/2021
B	ADDED STEEL, FOR APPROVAL	10/19/2021
0	ISSUED FOR CONSTRUCTION	12/23/2021

Job No. RRI21193
Proj. Mgr. VWW

Sheet Title
FOUNDATION DETAILS

Sheet No.
S2.2

LICENSED PROFESSIONAL ENGINEER
KIRK A. MACUMBER
15819
IOWA

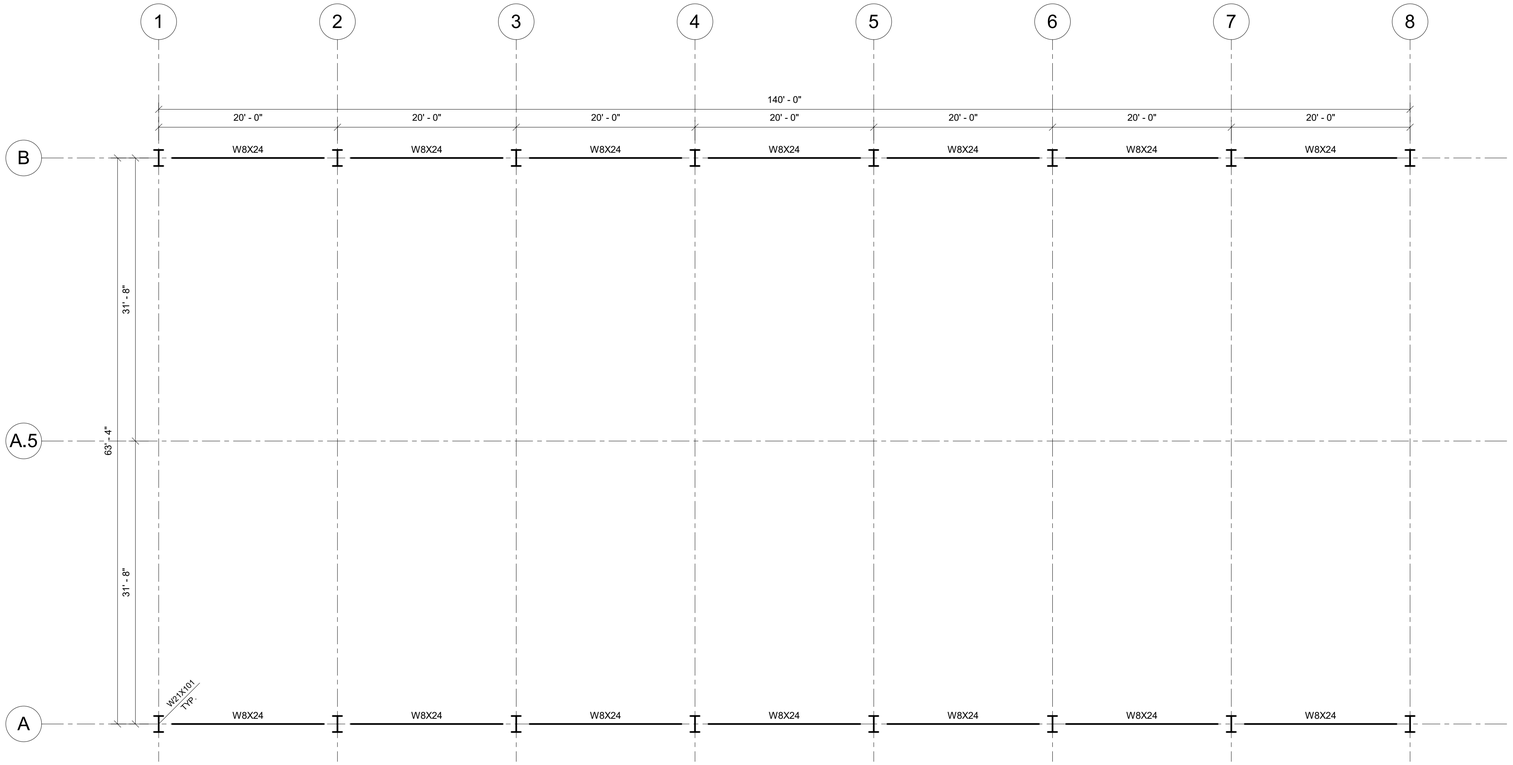

1 T/ STEEL = 120' - 0"
1/8" = 1'-0"

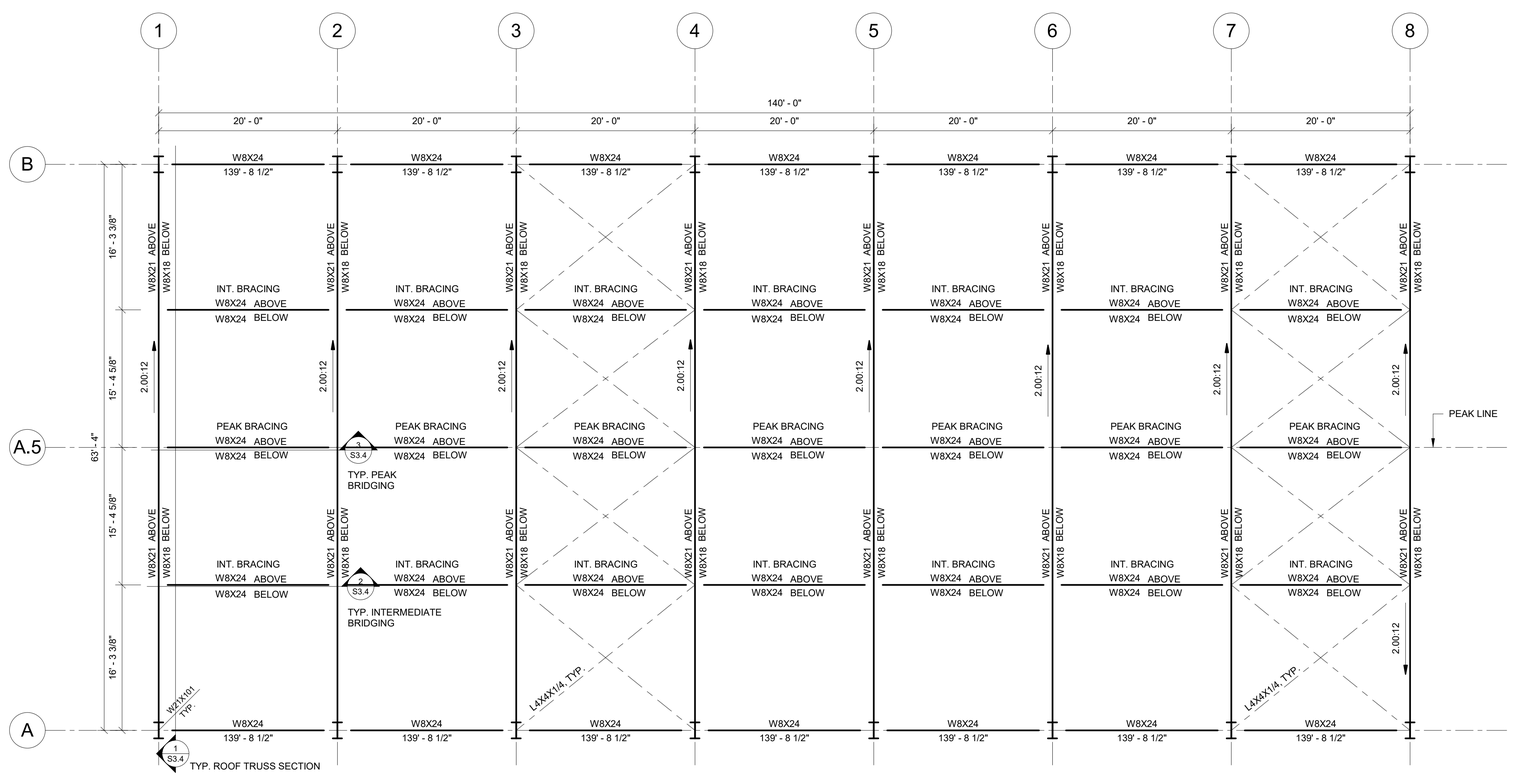

2 ROOF FRAMING PLAN
1/8" = 1'-0"

NOTES:

1) ALL MEMBERS SHOWN ARE FOR FUTURE CONSTRUCTION, EXCEPT FOR STRUT MEMBERS ON COLUMN LINES **A** AND **B**

2) FUTURE ROOF PURLINS (NOT SHOWN) TO HAVE A MAXIMUM SPACING OF 5 FEET

3) BAYS 3/4 AND 7/8 HAVE L4X4X1/4 X-BRACING, IN THE PLANE OF THE TOP CHORD OF THE ROOF TRUSSES

RAKER RHODES Industrial
Des Moines, Iowa
www.rakerrhodes.com

This drawing has been prepared by the Engineer, or under the Engineer's direct supervision. This drawing is provided as an instrument of service by the Designer / Engineer and is intended for use on this project only. Any reproduction, use, or disclosure of information contained herein without the prior written consent of the Engineer is strictly prohibited. (C) Copyright 2021 Raker Rhodes Engineering, LLC.

SIDELINE STEEL
MIDSTATES PRECAST CRANE BLDG

BONDURANT, IA

No.	Description	Date
B	ADDED STEEL FOR APPROVAL	10/19/2021
0	ISSUED FOR CONSTRUCTION	12/23/2021

Job No. RRI21193
Proj. Mgr. VWW

Sheet Title
FRAMING PLAN

Sheet No.
S3.1

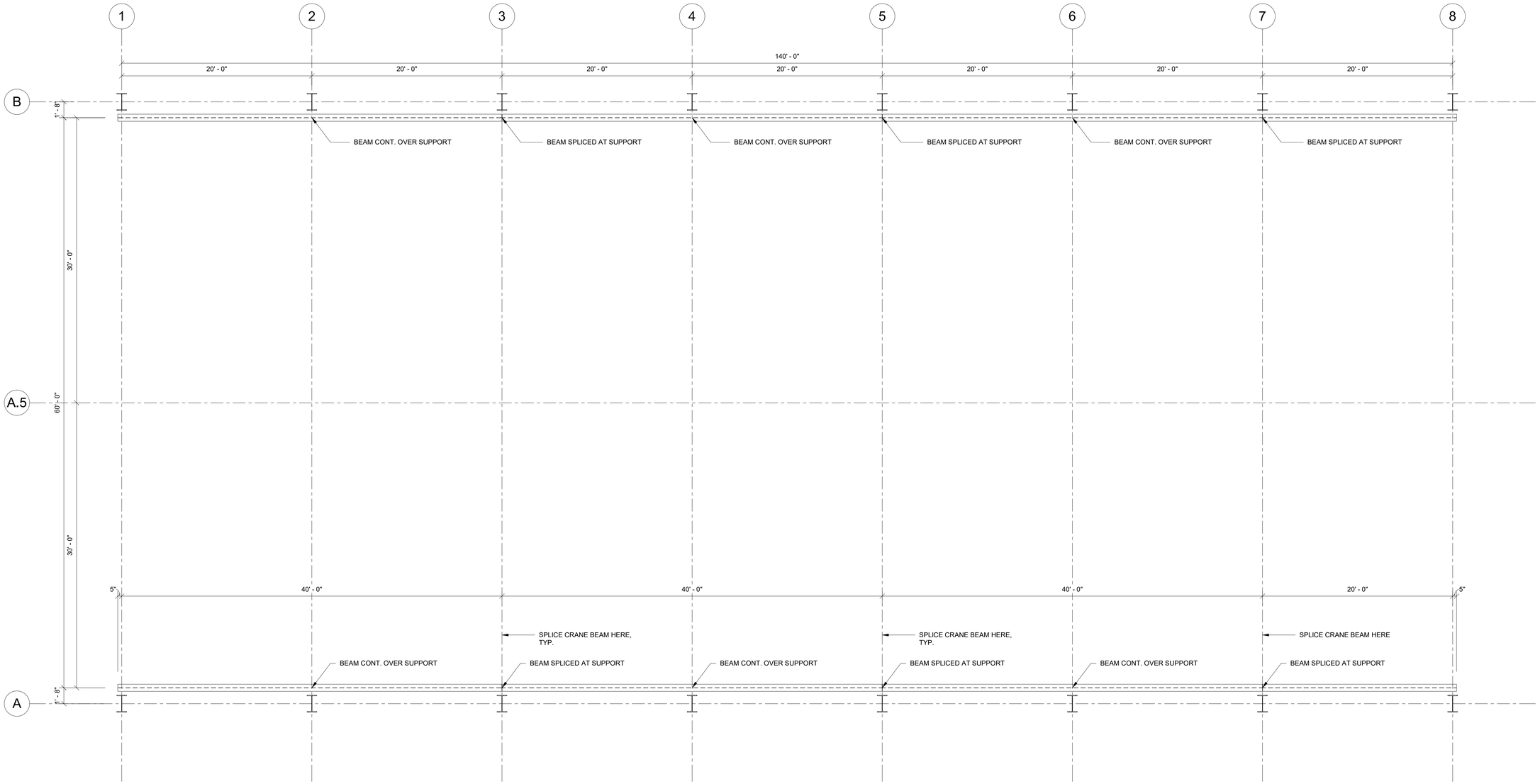

1 CRANE BEAM LAYOUT - T/ STEEL = 125' - 9 1/16"
3/16" = 1'-0"

RAKER RHODES Industrial
Des Moines, Iowa
www.rakerrhodes.com

This drawing has been prepared by the Engineer, or under the Engineer's direct supervision. This drawing is provided as an instrument of service by the Designer / Engineer and is intended for use on this project only. Any reproduction, use, or disclosure of information contained herein without the prior written consent of the Engineer is strictly prohibited. (C) Copyright 2020 Raker Rhodes Engineering, LLC.

SIDELINE STEEL
MIDSTATES PRECAST CRANE BLDG
BONDURANT, IA

No.	Description	Date
B	ADDED STEEL FOR APPROVAL	10/19/2021
0	ISSUED FOR CONSTRUCTION	12/23/2021

Job No. RRI21193
Proj. Mgr. VWW

Sheet Title
FRAMING PLAN

Sheet No.
S3.2

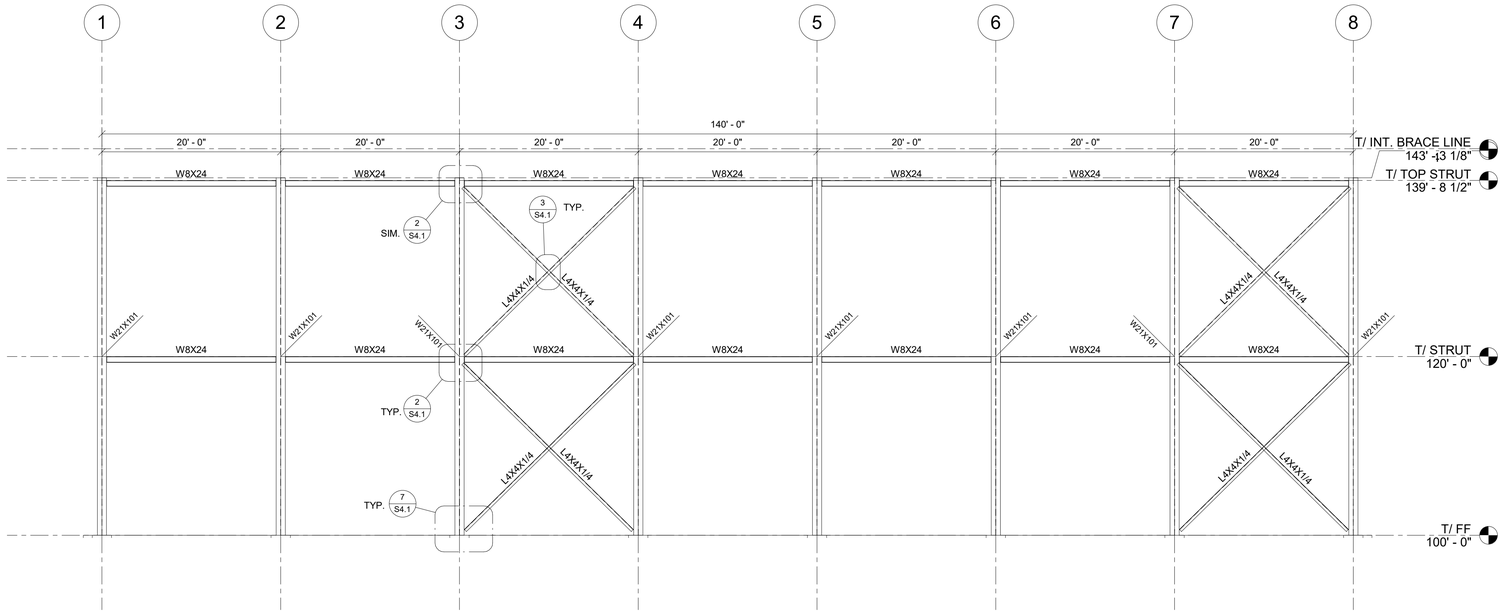

1 GRID LINE A
1/8" = 1'-0"

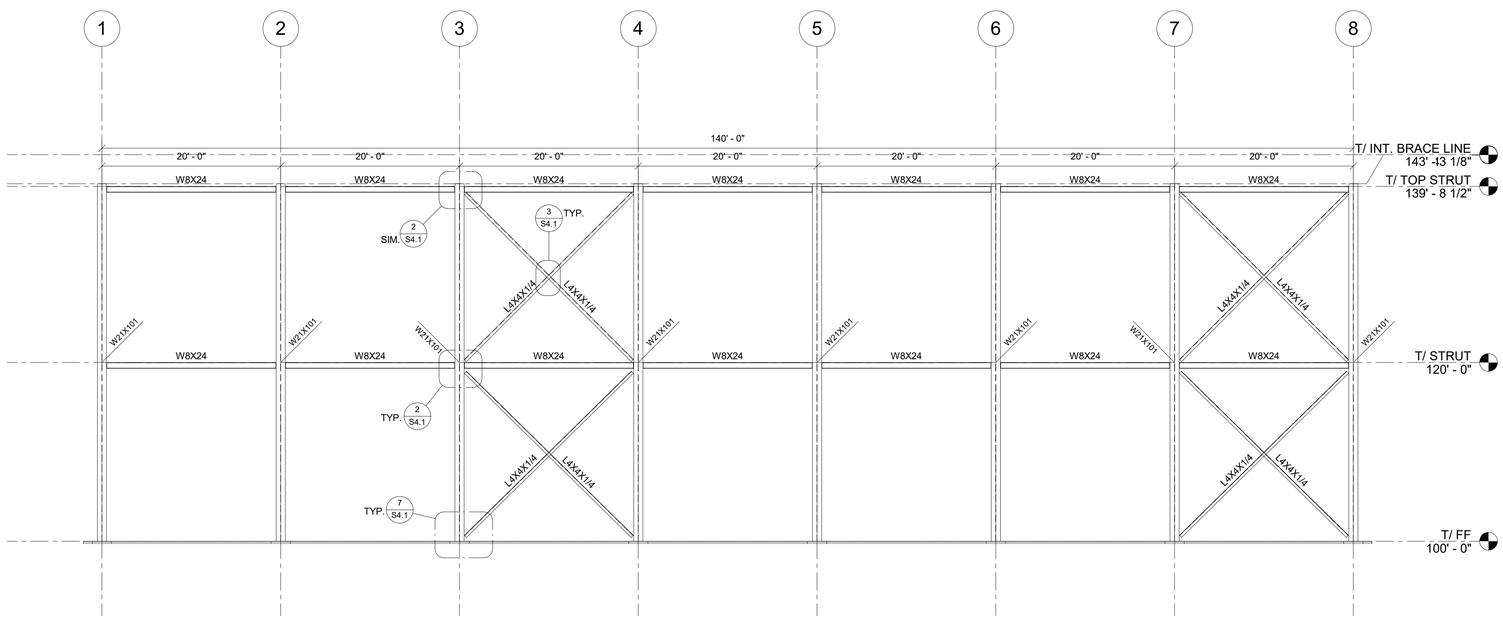

2 GRID LINE B
1/8" = 1'-0"

RAKER RHODES Industrial
Des Moines, Iowa
www.rakerrhodes.com

This drawing has been prepared by the Engineer, or under the Engineer's direct supervision. This drawing is provided as an instrument of service by the Designer / Engineer and is intended for use on this project only. Any reproduction, use, or disclosure of information, ideas, or concepts contained herein without the prior written consent of the Engineer is strictly prohibited. (C) Copyright 2020 by Raker Rhodes Engineering, LLC.

SIDELINE STEEL
MIDSTATES PRECAST CRANE BLDG
BONDURANT, IA

No.	Description	Date
B	ADDED STEEL FOR APPROVAL	10/19/2021
0	ISSUED FOR CONSTRUCTION	12/23/2021

Job No. RRI21193
Proj. Mgr. VWW

Sheet Title
FRAMING SECTIONS

Sheet No.
S3.3

LICENSED PROFESSIONAL ENGINEER
KIRK A. MACUMBER
15819
IOWA

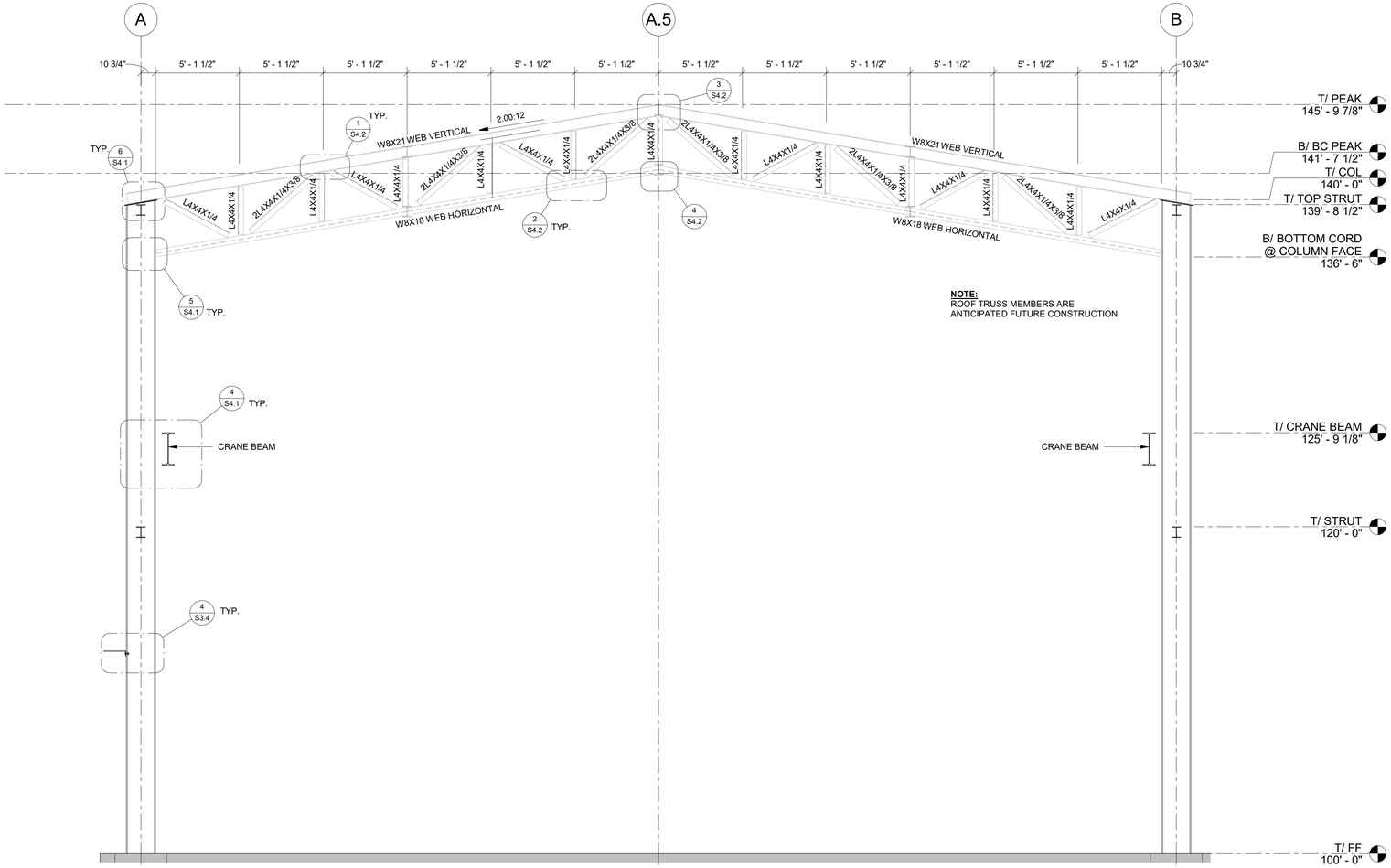

1 Section 3
1/4" = 1'-0"

NOTE:
ALL ROOF TRUSS MEMBERS ARE FUTURE CONSTRUCTION.
FABRICATOR TO DETAIL COLUMNS FOR FUTURE ROOF

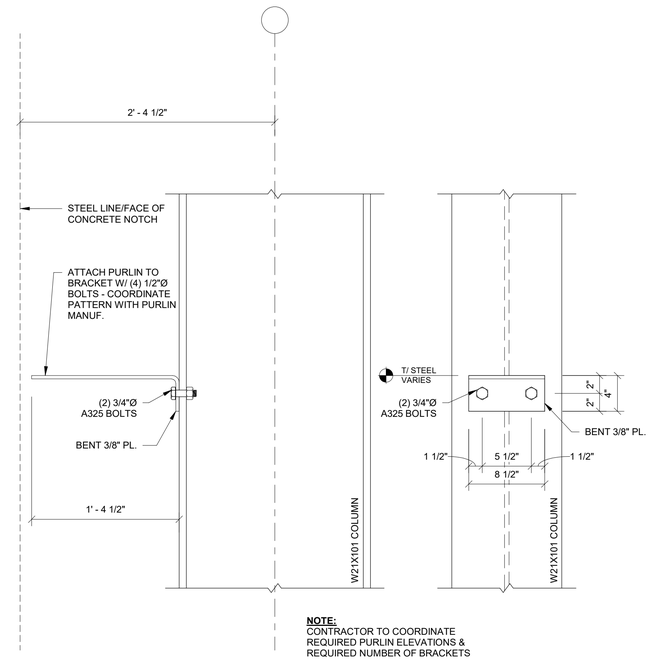

4 PURLIN BRACKET
1 1/2" = 1'-0"

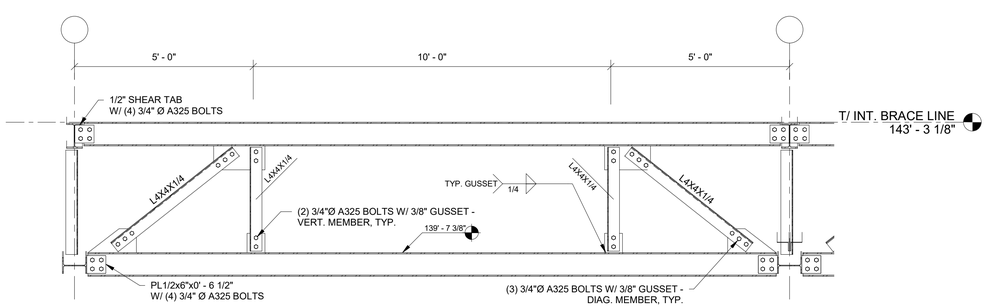

2 INTERMEDIATE BRIDGING
1/2" = 1'-0"

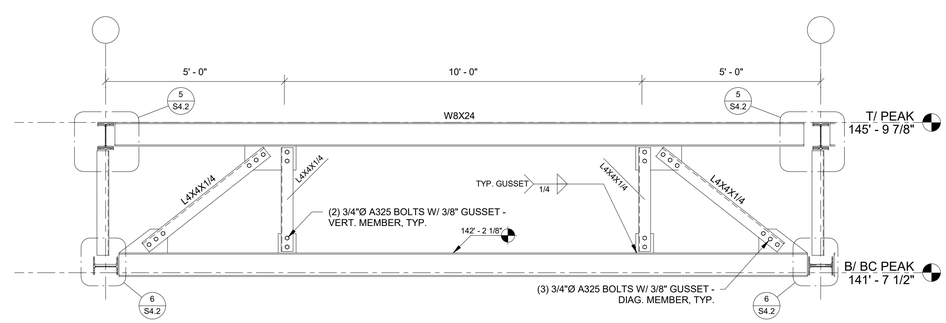

3 PEAK BRIDGING
1/2" = 1'-0"

LICENSED PROFESSIONAL ENGINEER
KIRK A. MACUMBER
15819
IOWA

RAKER RHODES Industrial
Des Moines, Iowa
www.rakerrhodes.com

This drawing has been prepared by the Engineer, or under the Engineer's direct supervision. This drawing is provided as an instrument of service by the Designer / Engineer and is intended for use on this project only. Any reproduction, use, or disclosure of information contained herein without the prior written consent of the Engineer is strictly prohibited. (C) Copyright 2021, Raker Rhodes Engineering, LLC.

SIDELINE STEEL
MIDSTATES PRECAST CRANE BLDG
BONDURANT, IA

No.	Description	Date
0	ISSUED FOR CONSTRUCTION	12/23/2021

Job No. RRI21193
Proj. Mgr. VWW

Sheet Title
FRAMING SECTIONS

Sheet No.
S3.4

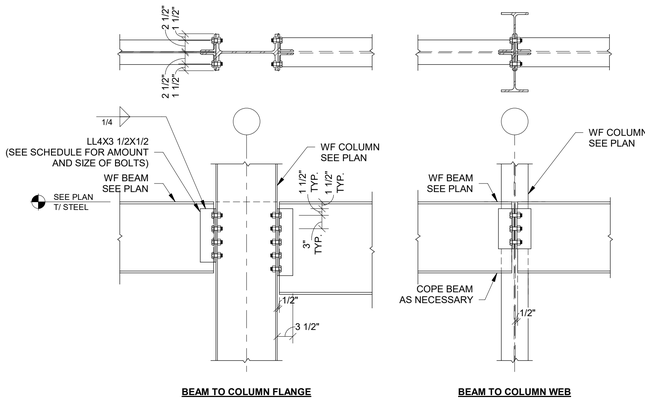

BEAM TO COLUMN FLANGE **BEAM TO COLUMN WEB**

NOTE: WHERE BEAMS ARE ADJACENT AT WEB, PROVIDE TEMPORARY SEAT OR SUPPORT UNTIL SECOND BEAM IS IN PLACE

CONNECTION SCHEDULE	
BEAM SIZE	A325N BOLTS
W8	(2) 3/4" Ø

NOTE: NUMBER OF BOLTS IN EACH ANGLE, TOTAL BOLTS ARE TWICE NUMBER SHOWN

1 S-BEAM TO COLUMN CONNECTION
3/4" = 1'-0"

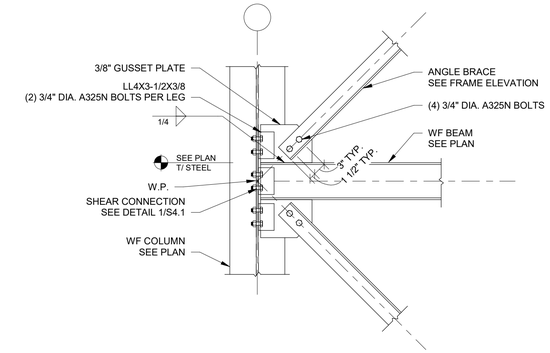

2 ANGLE BRACED BAY @ COLUMN
3/4" = 1'-0"

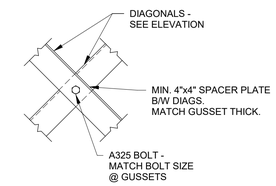

3 X-BRACING MID-BOLT
1" = 1'-0"

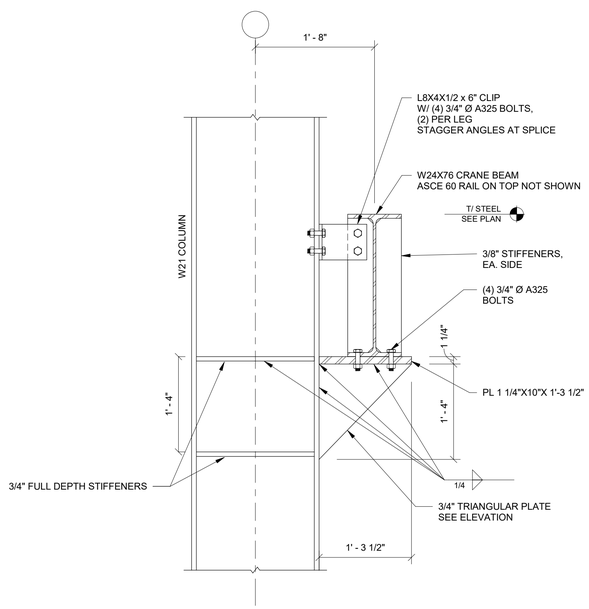

SECTION

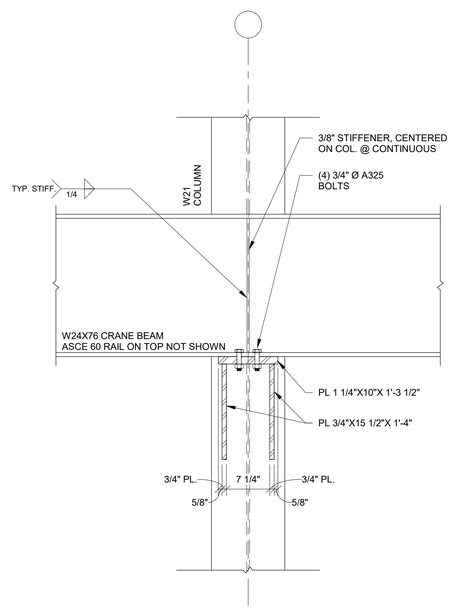

ELEVATION @ CONTINUOUS

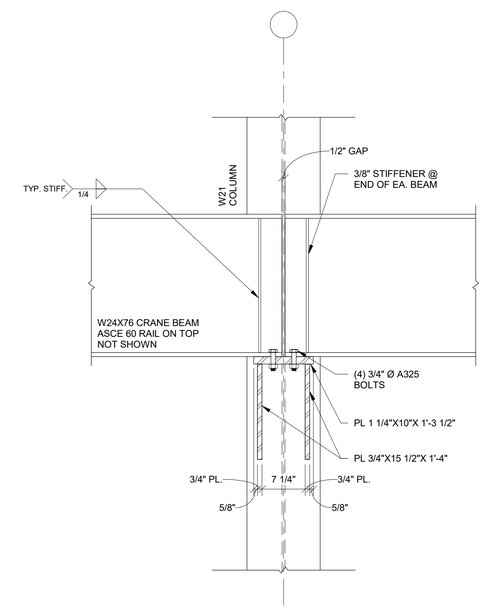

ELEVATION @ SPLICE

4 CRANE BEAM BRACKET
1" = 1'-0"

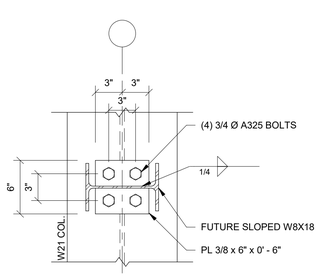

ELEVATION

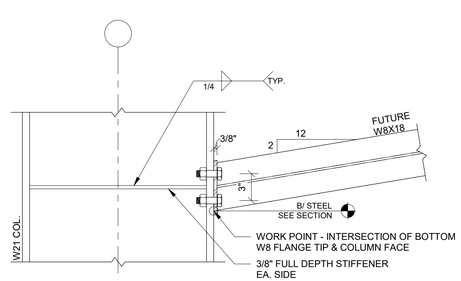

SECTION

5 BOTTOM CHORD CONNECTION
1 1/2" = 1'-0"

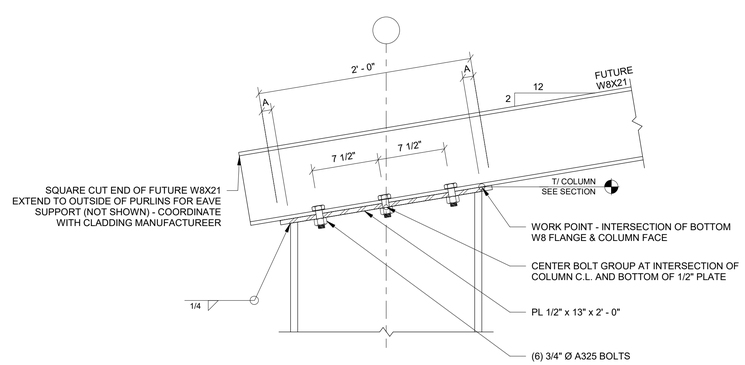

6 TOP CHORD CONNECTION
1 1/2" = 1'-0"

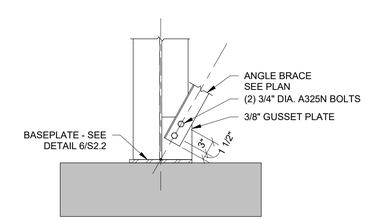

7 BRACE AT BASE
3/4" = 1'-0"

LICENSED PROFESSIONAL ENGINEER
KIRK A. MACUMBER
15819
IOWA

RAKER RHODES Industrial
Des Moines, Iowa
www.rakerrhodes.com

This drawing has been prepared by the Engineer, or under the Engineer's direct supervision. This drawing is provided as an instrument of service by the Designer / Engineer and is intended for use on this project only. Any reproduction, use, or disclosure of information contained herein without the prior written consent of the Engineer is strictly prohibited. (C) Copyright 2020, Raker Rhodes Engineering, LLC.

SIDELINE STEEL
MIDSTATES PRECAST CRANE BLDG
BONDURANT, IA

No.	Description	Date
B	ADDED STEEL FOR APPROVAL	10/19/2021
0	ISSUED FOR CONSTRUCTION	12/23/2021

Job No. RRI21193
Proj. Mgr. VWW

Sheet Title
FRAMING DETAILS

Sheet No.
S4.1

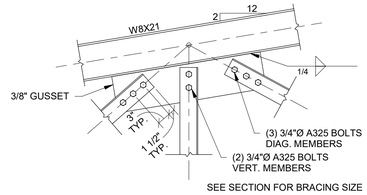

1 TC BRACE CONNECTION
3/4" = 1'-0"

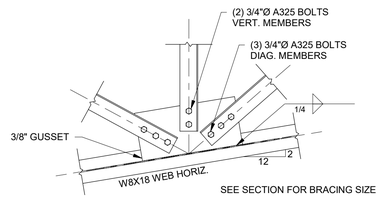

2 BC BRACE CONNECTION
3/4" = 1'-0"

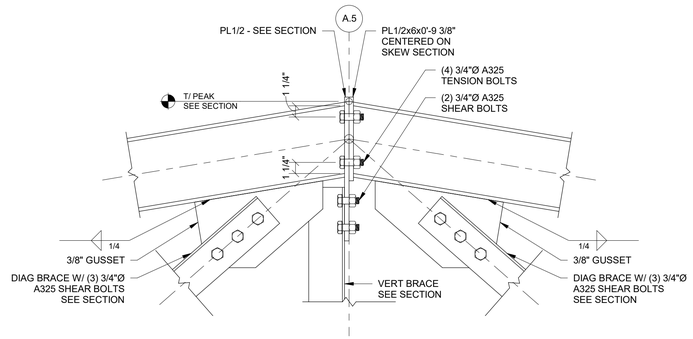

3 TC SPLICE
1 1/2" = 1'-0"

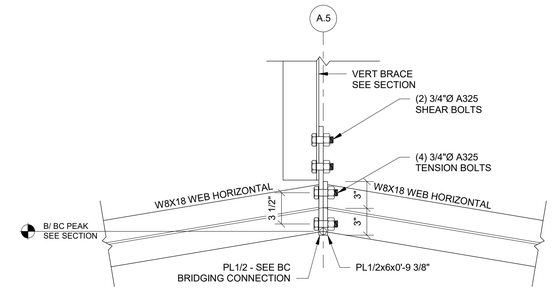

4 BC SPLICE
1 1/2" = 1'-0"

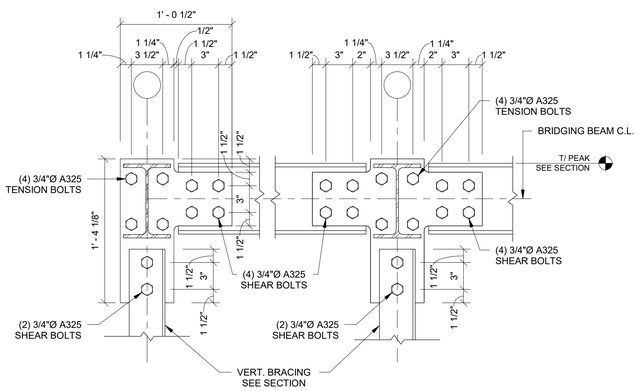

5 TC BRIDGING CONNECTION @ SPLICE
1 1/2" = 1'-0"

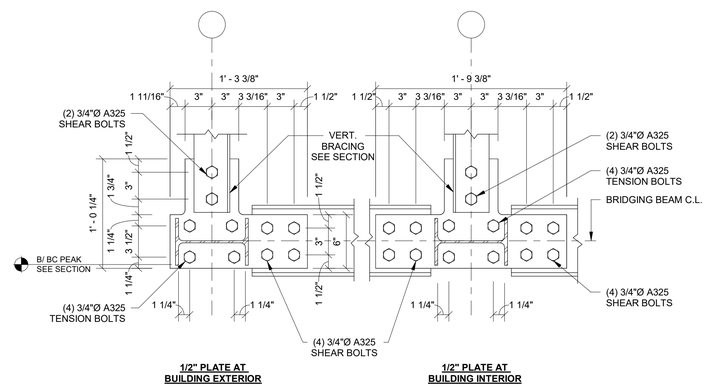

6 BC BRIDGING CONNECTION @ SPLICE
1 1/2" = 1'-0"

RAKER RHODES Industrial
Des Moines, Iowa
www.rakerrhodes.com

This drawing has been prepared by the Engineer, or under the Engineer's direct supervision. This drawing is provided as an instrument of service by the Designer / Engineer and is intended for use on this project only. Any reproduction, use, or disclosure of information contained herein without the prior written consent of the Engineer is strictly prohibited. (C) Copyright 2021, Raker Rhodes Engineering, LLC.

SIDELINE STEEL
MIDSTATES PRECAST CRANE BLDG
BONDURANT, IA

No.	Description	Date
B	ADDED STEEL FOR APPROVAL	10/19/2021
0	ISSUED FOR CONSTRUCTION	12/23/2021

Job No. RRI21193
Proj. Mgr. VWW

Sheet Title
ROOF FRAMING DETAILS

Sheet No.
S4.2

DocuSign Envelope ID: 9A9790D5-89B5-4020-9D7B-2EBE9B3112B3

BOARD OF ADJUSTMENT PERMIT
VARIANCE

Date: November 8, 2022 **Case Number: BA-1108-02 (#97)**

Name: GSC Properties LLC

Address: 2340 Hubbell Avenue SW, Bondurant, IA 50035

Legal Description: THAT PART OF THE SOUTH 81.50 ACRES OF THE NE FRACTIONAL ¼ OF SECTION 1, TOWNSHIP 79 NORTH, RANGE 23 WEST OF THE 5TH P.M., NOW INCLUDED IN AND FORMING A PART OF THE CITY OF BONDURANT, POLK COUNTY, IOWA, BEING MORE PARTICULARLY DESCRIBED AS PARCEL "A" ON THE PLAT OF SURVEY FILED JULY 30, 1979 IN BOOK 4937 AT PAGE 244 IN THE OFFICE OF THE POLK COUNTY RECORDER, POLK COUNTY, IOWA.

IS HEREBY GRANTED A VARIANCE to Section 179.01.2.I.6 of the Zoning Code to allow for a reduction in the amount of primary building materials required by the Overlay District for street-facing building elevations at 2340 Hubbell Avenue SW, subject to the following condition:

1. That such approval also applies to future buildings on site.

All construction activities covered by this Variance Permit shall be done in strict accordance with the written application.

DocuSigned by:

Greg Hanson

4F5B6BB9A11846D...

Greg Hanson, Chairperson